XTU SERIES

EXIT & EMERGENCY LIGHTING

XTU-CL-RG-EM-RC

SUPER SLIM LED EXIT SIGN, REMOTE CAPABLE, WHITE



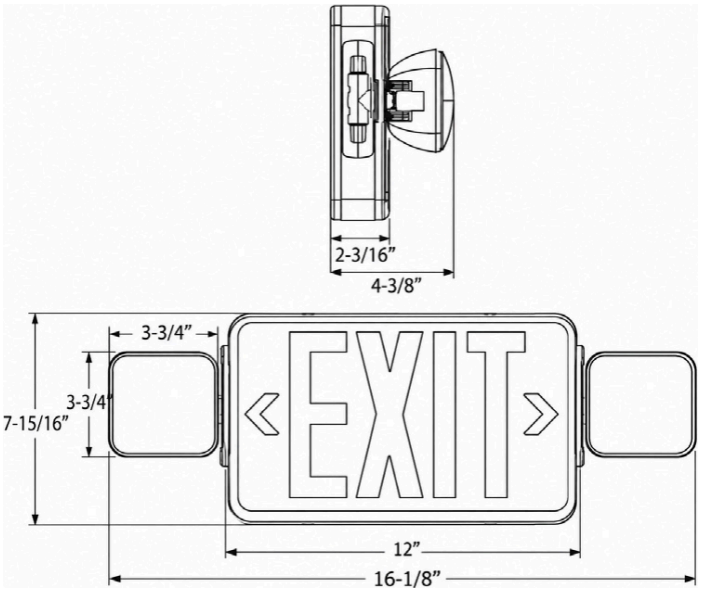

Technical Drawing: 16 1/8" (W) x 7 15/16" (H) x 4 3/8" (D)

Customer Name:

Project Name:

Note: | Type:

Exit signs shall be provided at every exit door, at the intersection of corridors, at exit stairways or ramps and such other locations and intervals as are necessary to provide the occupants with knowledge of the various means of egress available

FEATURES

- 3-year warranty
- Maximum 24 hours For Full Recharge Time
- Injection-Molded Thermoplastic ABS Housing And Polycarbonate Cover, UL 94V-0 Flame Rating

SPECIFICATIONS

ELECTRICAL

- 120V/277V AC Dual Voltage Operation
- Light Head Wattage: 2.4W Per Head
- Sign Wattage: 3.5W
- Input Power: 2.90-3.79W
- AC Charging Current: 32mA
- Fully Automatic Solid-State, Two Rate Charger Initiates Battery Charging to Recharge a Discharged Battery in 24 Hours
- Built-in 3.6V 2400mAh Ni-Mh Battery for Minimum 90 Minutes Emergency Operation

MECHANICAL

- Remote Capable (designed with a high capacity battery backup system that is capable of powering one or more additional external emergency light remote heads for the 90 minute minimum emergency run time)
- Injection-Molded Thermoplastic ABS Housing And Polycarbonate Cover, UL 94V-0 Flame Rating
- Red & Green Lenses Are Included. The Default Is Red
- To Change Color Of The Sign Change The Lens & Flip The Color Switch Inside
- Single or Double Face (Universal)
- Letters 6" Height With 3/4" stroke
- Operating Temperature: 32°F to 104°F
- Maximum 24 Hours For Full Recharge Time
- Universal J-box mounting pattern
- Innovative, Easy Installation in Minutes
- IP20, Indoor Use Only
- White Housing

LIGHTING

- Color Temperature: 6132K
- Total Lumens: 8lm (AC) / 272lm (DC)
- Ultra Bright Red LEDs
- Internal Solid-State Transfer Switch Automatically Connects The Internal Battery to LED Board for Minimum 90-Minute Emergency Illumination
- Charge Rate/Power "ON" LED Indicator Light And Push-to-Test Switch For Mandated Code Compliance Testing

APPLICATIONS

- Ideal for every exit door, at the intersection of corridors, at exit stairways or ramps and such other locations

Phone/Fax: (877) 805-2252
www.westgatemfg.com

PERFORMANCE TABLE

MODEL NAMES	WATTAGE	VOLTAGE	LUMENS	COLOR TEMP.	LPW
XTU-CL-RG-EM-RC	3.5W	120-277V	8lm (AC) 272lm (DC)	6132K	3 (AC) 113 (DC)

OTHER VIEWS



SIDE VIEW



FRONT VIEW



FRONT VIEW

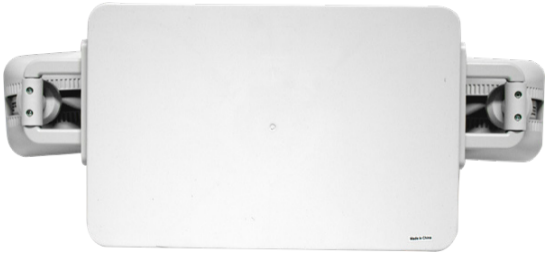

BACK VIEW

ACCESSORIES

MODEL NAMES	DESCRIPTION	IMAGE
EL-RH1 **EL-RH**	**Westgate compatible remote heads** - 1 head (EL-RH1) or 2 heads (EL-RH) - 1W per head - 3.6V / 6V / 9.9V / 12VDC - White housing	

OTHER MODELS

XTU-CL-RG-EM-RC-BK



Phone/Fax: (877) 805-2252
www.westgatemfg.com