# WPFX SERIES Outdoor Lighting

WESTGATE
THE FUTURE IS HERE...AND IT'S QUITE BRIGHT!

WPFX-MD-20-40W-MCTP-P

MCTP Multi Color Temperature & Multi Power/Wattage (Selectable)

Customer Name:

Project Name:

Note: | Type:

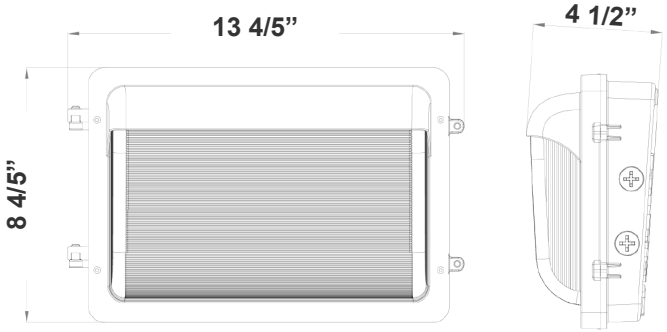


Ideal for general site lighting, alleys, loading docks, doorway, pathway, and parking areas. Great for use with motion sensors or another instant on/off controls.

**13 4/5” (W) x 8 4/5” (H) x 4 1/2” (D)**

## Features

- High Light Transmittance, Anti-UV and Fire Resistant Glass Lens
- Two 1/2” Knockouts on Each Side
- 7-Year Warranty
- Die-Cast Aluminum With Powder Coat Finish (Dark Bronze)
- Multi Color Temperature & Multi Power/Wattage (Selectable)

## Technical Specifications

### Electrical:

- Voltage: 120-277V AC 60Hz
- Wattage: 20W/30W/40W
- Power Factor: >0.9
- THD: <20%
- Efficacy: 130 LPW

### Mechanical:

- Die-Cast Aluminum With Powder Coat Finish
- Glass Lens
- DC Button Photocell with ON/OFF switch Included
- Two 1/2” Knockouts on Each Side
- Operating Temperature: -40ºF -113ºF
- 7-Year Warranty
- IP65, Suitable For Wet Location

### Lighting:

- Dimming: 0~10V Dimmable
- Multi CCT(Switches are inside fixture)
- Lumileds 2835, High CRI.
- Total Lumens: 5200LM Max
- Color Temperatures: 3000K/4000K/5000K
- Color Rendering Index: CRI ≥ 80
- Beam Angle: H127° x V85°
- Rated life: 70,000 Hrs

### Applications:

- Entrance Lighting
- Courtyard Lighting
- Industrial Lighting
- Outdoor Landscape Lighting
- Building The hotel
- Wall Lighting Area And So On

### Other Models:

- 80W | 10400LM | WPFX-MD-40-80W-MCTP-P
- 120W | 15600LM | WPFX-LG-80-120W-MCTP-P

UL LISTED | DIMMING 1-10V | IP65 | 7 YEAR LIMITED WARRANTY

Phone: (877) 805-2252 | Fax: (877) 805-2252
www.westgatemfg.com |

WG-ZY-Z4-2Z

## Photometrics: WPFX-MD-20-40W-MCTP-P

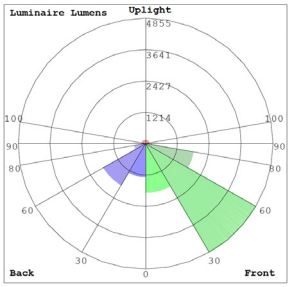


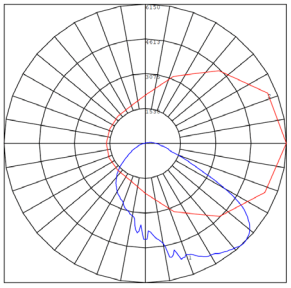

BUD Rating: B3-U3-G3

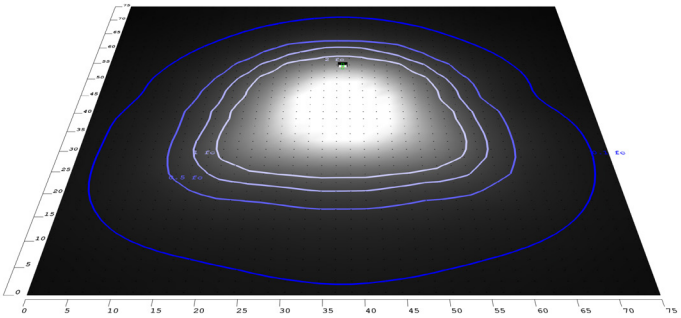

Area 75'x 75'  Mounting Height: 8'

## Other Views:

Side View

Front View

Back View

## Performance Table: WPFX-MD-20-40W-MCTP-P

| MODEL NO. | Wattage | Voltage | Lumens | Color Temp. | BUG Rating | LPW |
|---|---|---|---|---|---|---|
| WPFX-MD-20-40W-MCTP-P | 20W | 120~277V | 3100LM | 3000K<br>4000K<br>5000K | B3-U3-G3 | 130 |
| | 30W | | 3900LM | | | |
| | 40W | | 5200LM | | | |

## Sample Ordering

| Model | | Size | | Min. | | Wattage | | Color Temp. | | |
|---|---|---|---|---|---|---|---|---|---|---|
| WPFX | - | MD | - | 20 | - | 40W | - | MCTP | - | P |

## Factory-Installed Option:

**Blank** = No Option For Accessories
**OPT-EM-OD1INT** = INTERNAL EMERGENCY BACK UP BATTERY
**OPT-SEN-3MRLV-5** = PROGRAMMABLE MICROWAVE SENSOR
**OPT-WP-480V** = CHANGE VOLTAGE TO 480V

## FACTORY-INSTALLED OPTION:

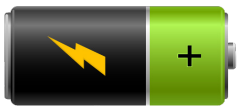

OPT-EM-OD1INT

OPT-SEN-3MRLV-5


Phone: (877) 805-2252 | Fax: (877) 805-2252
www.westgatemfg.com |

## COLOR CHART: * Choose from one of our Premium Colors with no set-up fee.

### Gloss:

SILVER METALLIC 70 GLOSS T357-GR105

SILVER METALLIC 30 GLOSS T353-GR06

DARK RED 90 GLOSS P009-RD02

INTERNATIONAL ORANGE 90 GLOSS T009-OG26

SAFETY ORANGE 90 GLOSS T009-OG01

YELLOW 90 GLOSS T009-YL14

YELLOW 90 GLOSS T009-YL01

TRAFFIC GREEN 70 GLOSS T007-GN16

GREEN 70 GLOSS T007-GN13

GREEN 60 GLOSS C006-GN03

BLUE 90 GLOSS T009-BL01

DARK BLUE 80 GLOSS T008-BL20

RAL 8028 TERRA BROWN 90 GLOSS C209-BR358

### Hammer:

WHITE HAMMER T013-WH09

BEIGE HAMMER T013-BG38

GREY HAMMER C013-GR08

SILVER HAMMERTONE T064-GR05

BLACK HAMMER T013-BK62

RED HAMMER T013-RD15

GREEN HAMMER T013-GN220

BLUE HAMMER T013-BL468

BRONZE HAMMER T012-BR161

### Texture:

WHITE TEXTURE C031-WH120

FLINT GRAY TEXTURE T243-GR522

BLACK TEXTURE C241-BK109

RED TEXTURE T241-RD129

BLUE TEXTURE C241-BL544

OIL RUBBED BRONZE TEXTURE T291-BR251

### Vein:

BLACK/WHITE VEIN T075-WH34

SILVER VEIN T375-BK26

COPPER VEIN EXTERIOR T075-BK211

GOLD VEIN T375-BK10

COPPER VEIN T375-BK07



Phone: (877) 805-2252 | Fax: (877) 805-2252
www.westgatemfg.com |