WESTGATE
THE FUTURE IS HERE...AND IT'S QUITE BRIGHT!
RADIUS SERIES

JOB NAME: _____

DATE: _____

TYPE: _____



# WL-181-BK
# WL-181-BR

## WELL LIGHTS WITH LED LAMPS

### ELECTRICAL SPECIFICATIONS:

- Voltage: 12VAC/DC
- Wattage: 5W
- Efficacy: 80LM/W

### HOUSING SPECIFICATIONS:

- Die Cast Aluminum, Black /Bronze Finish
- Silicon-filled wire nuts
- 3FT. SPT-2 18AWG Lead Wire
- IP rating: IP67, Suitable for wet Locations

### CERTIFICATIONS:

### DIMENSIONS:

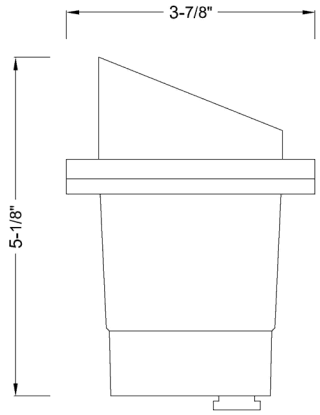


| MODEL | WATTS | VOLTAGE | LUMENS | COLOR TEMP |
|---|---|---|---|---|
| WL-181-BK | 5W | 12VAC/DC | 400LM | 3000K |
| WL-181-BR | 5W | 12VAC/DC | 400LM | 3000K |

### ACCESSORIES INCLUDED:



Silicon-filled wire nuts



3FT. SPT-2 18AWG Lead Wire

### LIGHTING SPECIFICATIONS:

- Light Source: MR16 Lamp Included (WESTGATE Part Number: MR16-400L-30K-D)
- Lens: Glass Lens
- Total lumens: 400LM
- Color temperature: 3000K
- Beam angle: 36°

### WARRANTY: 1 years

Rev. 2018-06-05