WESTGATE
THE FUTURE IS HERE...AND IT'S QUITE BRIGHT!
RADIUS SERIES

JOB NAME: _____

DATE: _____

TYPE: _____



DIMENSIONS:

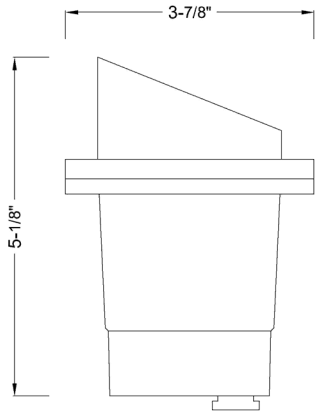

WL-181-BZ

WELL LIGHTS WITH LED LAMPS

MODEL	WATTS	VOLTAGE	LUMENS	COLOR TEMP
WL-181-BZ	5W	12VAC/DC	400LM	3000K

ELECTRICAL SPECIFICATIONS:

- Voltage: 12VAC/DC
- Wattage: 5W
- Efficacy: 80LM/W

HOUSING SPECIFICATIONS:

- Die Cast Aluminum, Antique Bronze Finish
- Silicon-filled wire nuts
- 3FT. SPT-2 18AWG Lead Wire
- IP rating: IP67, Suitable for wet Locations

CERTIFICATIONS:

ACCESSORIES INCLUDED:



Silicon-filled wire nuts



3FT. SPT-2 18AWG Lead Wire

LIGHTING SPECIFICATIONS:

- Light Source: MR16 Lamp Included (WESTGATE Part Number: MR16-400L-30K-D)
- Lens: Glass Lens
- Total lumens: 400LM
- Color temperature: 3000K
- Beam angle: 36°

WARRANTY: 1 years

Rev. 2018-06-05