WESTGATE
THE FUTURE IS HERE...AND IT'S QUITE BRIGHT!
RADIUS SERIES

JOB NAME: _____

DATE: _____

TYPE: _____



UW-125-BS
UW-125-SS

LED UNDERWATER LIGHTS

ELECTRICAL SPECIFICATIONS:

- Voltage: 12VAC/DC
- Wattage: 5W
- Efficacy: 80LM/W

HOUSING SPECIFICATIONS:

- Housing: Cast Brass/Stainless Steel
- Silicon-filled wire nuts
- 20FT. SPT-2 18AWG Lead Wire
- IP rating: IP68, Suitable for wet Locations

CERTIFICATIONS:

WET location · UNDER WATER IP68 · 1 YEAR WARRANTY

DIMENSIONS:

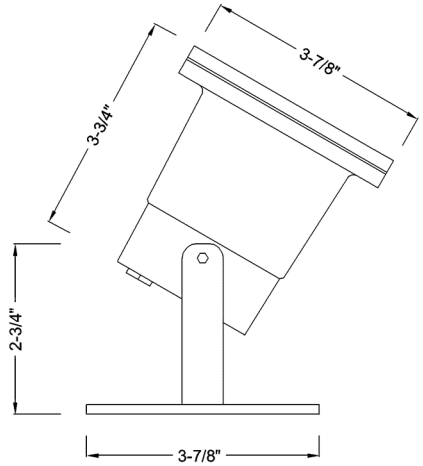

MODEL	WATTS	VOLTAGE	LUMENS	COLOR TEMP	HOUSING
UW-125-BS	5W	12VAC/DC	400LM	3000K	Cast Brass
UW-125-SS	5W	12VAC/DC	400LM	3000K	Stainless Steel

ACCESSORIES INCLUDED:



Silicon-filled wire nuts



20FT. SPT-2 18AWG Lead Wire

LIGHTING SPECIFICATIONS:

- Light Source: MR16 Lamp Included (WESTGATE Part Number: MR16-400L-30K-D)
- Lens: Glass Lens
- Total lumens: 400LM
- Color temperature: 3000K
- Beam angle: 36°

WARRANTY: 1 years

Rev. 2020-05-13

WESTGATE MFG., INC. • Phone (877) 805-2252 • Fax (877) 809-2252