UHX SERIES

INDUSTRIAL LIGHTING

WESTGATE
THE FUTURE IS HERE...AND IT'S QUITE BRIGHT!

UHX-G2-150W-MP-40K-SR
UHX-G2-150W-MP-50K-SR
SPEC SERIES NEW GENERATION - UFO HIGHBAY

MP Multi Power/Wattage (Selectable)

Customer Name:

Project Name:

Note: | Type:



Selection:

In a aluminium shell designed for heat dissipation, UHX is IP65 water resistant rated and ideal for general site lighting, alleys, loading docks, doorways, pathways, parking areas, warehouses and storage buildings.

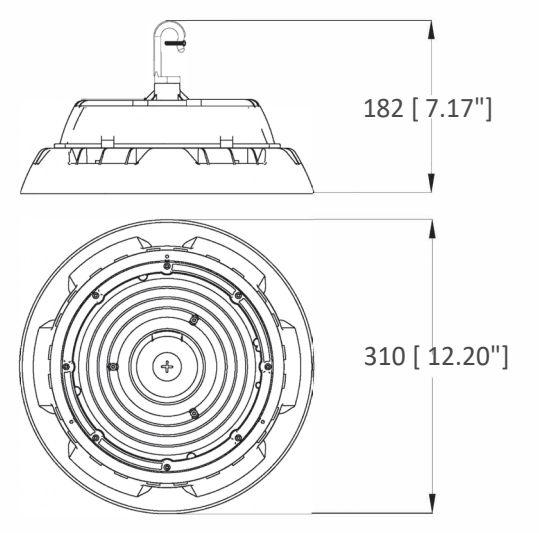

7.17" (H) X 12.2" (D)

Features

- Waterproof design, suitable for wet locations
- ADC12 Aluminum Heat Sink, Outdoor Powder Coating Finish
- Optical Lens: PC Materials High Light Transmittance, Anti-UV, Fire-Resistant

Technical Specifications

Electrical:

- Input Wattage: 80W/100W/150W
- Input Voltage: 120-277V AC 50/60Hz
- Power Factor: >0.9
- THD: <20%
- Efficacy: 180LM/W

Mechanical:

- ADC12 Aluminum Heat Sink, Outdoor Powder Coating Finish
- Optical Lens: PC Materials High Light Transmittance, Anti-UV, Fire-Resistant
- 3' SJTW 18,3 AWG Power Cable
- 6' SJTW Dimming Cable
- Twist-Lock Zhaga Socket Pre-Installed. See Motion, Sensor Accessories
- LED PCB Board: High Conductive, Waterproof, Aging Resistance, salt mist Resistance, Ensure the Safety and Long Lifespan
- Operating temperature: -40°F to 122°F
- IP rating: IP65, Wet Locations
- 5-Year Warranty

Lighting:

- Dimming: 0~10V
- Multi Power (Selectable Switch Located On The Driver Housing)
- Total Lumens: 27000LM Max.
- Color Temperatures: 4000K/ 5000K
- Color Rendering index: > 80
- Selectable Beam Angles: 90°
- Lifespan: 50,000 Hrs

Applications:

- Ideal for general site lighting, alleys, loading docks, doorway, pathway, parking areas, warehouses and storage buildings.

c UL us LISTED | WET LOCATION | DIMMING 0-10V | IP65 | 5 YEAR LIMITED WARRANTY

Phone: (877) 805-2252 | Fax: (877) 805-2252
www.westgatemfg.com |

Photometrics: UHX-G2-150W-MP-SR

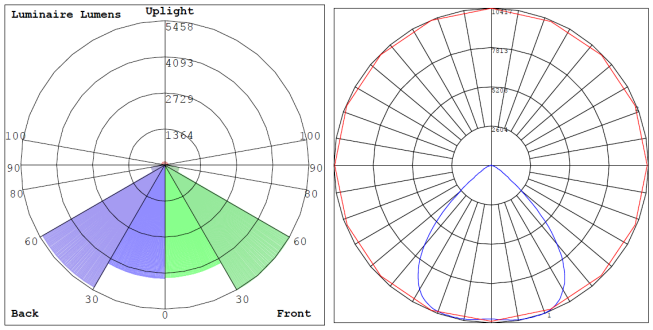

BUG Rating: B4-U3-G1

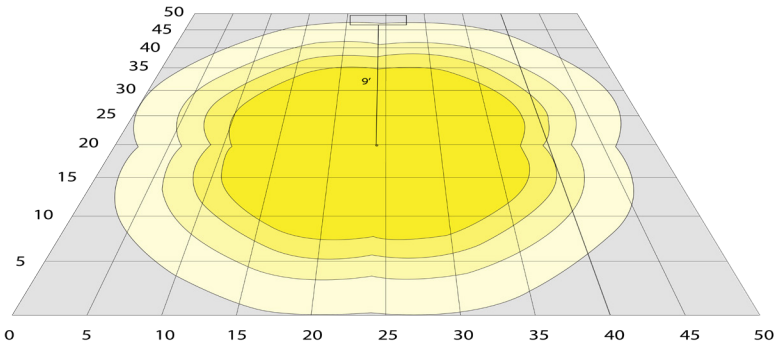

Area 50'x 50' Mounting Height: 9'

Other Views:



Side View



Top View

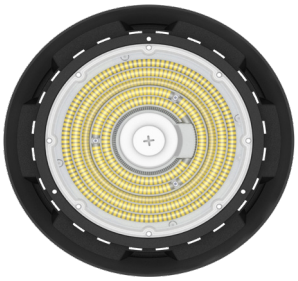

Bottom View

Performance Table: UHX-G2-150W-MP-SR

MODEL NO.	Wattage	Voltage	Lumens	Color Temp	BUG Rating	LPW
UHX-G2-150W-MP-40K-SR UHX-G2-150W-MP-50K-SR	80W 100W 150W	120-277V	14400LM 18000LM 27000LM	4000K 5000K	B4-U3-G1	180LM/W

Sample Ordering

Model	Generation	Wattage	Power	Color Temp.	Sensor
UHX	G2	150W	MP		SR

40K = 4000K
50K = 5000K

Accessory

Blank = No Accessory
HB-RING = HIGHBAY TOP RING ADAPTER, 1/2in
HB-EB-50/75 = HIGHBAY EXPANSION BUSHING FROM 1/2in TO 3/4"
UHX-SMB = UHX SERIES SURFACE MOUNTING YOKE BRACKET
UHX-WG-A = UHX SERIES WIRE GUARD, FITS ON FIXTURES
UHX-SC = UHX SERIES 22" SAFETY CABLE
UHX-G2-ALR-A = UHX SERIES ALUM 60° ALUM. REFLECTOR FOR G2-150W
UHX-G2-ALRW-A = 90° ALUM. REFLECTOR FOR G2 150W
UHX-G2-PCR-A = UHX SERIES PRISMATIC PC REFLECTOR FOR G2 150W
UHX-G2-150W-REFL-AR = UHX-G2 150W REFLECTOR ADAPTER FOR UHX-PCR-B
UHX-SA-5075 = 1/2 IN STEM-MOUNTING ADAPTER WITH CABLE PASSAGE WITH 1/2 IN TOP THREAD
UHX-CL-A = REPLACEMENT CLEAR LENS FOR UP TO 150W
SCL-GS210 = HEAVY-DUTY ADJUSTABLE 5/64" 10 FT. SUSPENSION KIT WITH LOOP GRIPPER & HOOK
SCL-GS220 = HEAVY-DUTY ADJUSTABLE 5/64" 20 FT. SUSPENSION KIT WITH LOOP GRIPPER & HOOK
WEC-3MR-72-TLB-BK = 600W MAX, ZHAGA 12-24VDC MICROWAVE SENSOR, BLACK WITH BASE (OPTIONAL REMOTE CONTROL WEC-3RC)
WEC-3PR-72-TLB-WH = 600W MAX, ZHAGA 12-24VDC MICROWAVE SENSOR, WHITE WITH BASE (OPTIONAL REMOTE CONTROL WEC-3RC)

Factory-Installed Option:

Blank = No Accessory
OPT-EM-UHX = EXTERNAL EMERGENCY BACKUP BATTERY INSTALLED ON TOP OF THE FIXTURE
OPT-HBC=125TL-BK = NEMA TWIST-LOCK PLUG 8FT, 15A, 125V, 16/3TL, BLK
OPT-HBC=277TL-BK = NEMA TWIST-LOCK PLUG 8FT, 15A, 277V, 16/3TL, BLK
OPT-HBC=125SB-BK = STRAIGHT BLADE PLUG 10FT, 15A, 125V, 18/3TL, BLK
OPT-SEN-UHX = MICROWAVE BI-LEVEL SENSOR

ACCESSORIES:

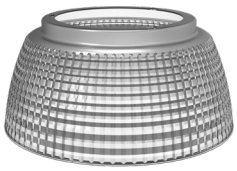

UHX-G2-PCR-A
UHX SERIES
PRISMATIC PC ALUM.
REFLECTOR



UHX-G2-ALR-A
UHX SERIES ALUM
60° ALUM. REFLECTOR
FOR G2 150W



HB-EB-50/75
HIGHBAY EXPANSION
BUSHING FROM 1/2in
TO 3/4”



UHX-SMB
UHX SERIES SURFACE
MOUNTING YOKE
BRACKET



UHX-G2-ALRW-A
90° ALUM. REFLECTOR FOR
150W (MP & MCTP) & 230W
(MP ONLY)



HB-RING
HIGHBAY TOP RING
ADAPTER, 1/2in



UHX-SA-5075
1/2 IN STEM-MOUNTING
ADAPTER WITH CABLE
PASSAGE WITH 1/2 IN TOP
THREAD



UHX-G2-150W-REFL-AR
UHX-G2 150W REFLECTOR ADAPTER
FOR UHX-PCR-B



UHX-SC
UHX SERIES 22”
SAFETY CABLE

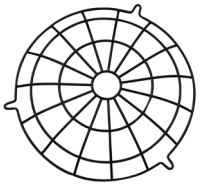

UHX-WG-A
UHX SERIES WIRE
GUARD, FITS ON
FIXTURES



WEC-3RC
REMOTE CONTROL



WEC-3MR-72-TLB-BK
SENSOR



WEC-3PR-72-TLB-WH
SENSOR

FACTORY-INSTALLED OPTION:



OPT-HBC-125SB-BK
STRAIGHT BLADE PLUG 10FT, 15A,
125V, 18/3TL, BLK



OPT-HBC-125TL-BK
NEMA TWIST-LOCK PLUG 8FT, 15A,
125V, 16/3TL, BLK



OPT-HBC-277TL-BK
NEMA TWIST-LOCK PLUG 8FT, 15A,
277V, 16/3TL, BLK



OPT-EM-UHX
EXTERNAL EMERGENCY
BACKUP BATTERY INSTALLED
ON TOP OF THE FIXTURE
(The bracket can be painted)

Dimensions:



UHX-G2-ALR-A
UHX SERIES 60° ALUM.
REFLECTOR FOR G2 150W

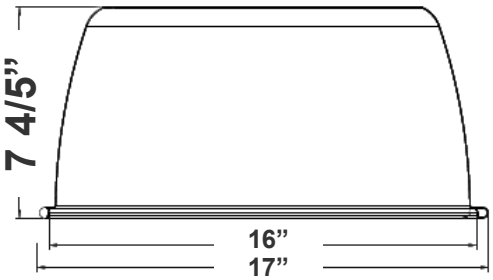



UH-G2-ALRW-A
90° ALUM. REFLECTOR FOR
G2 150W



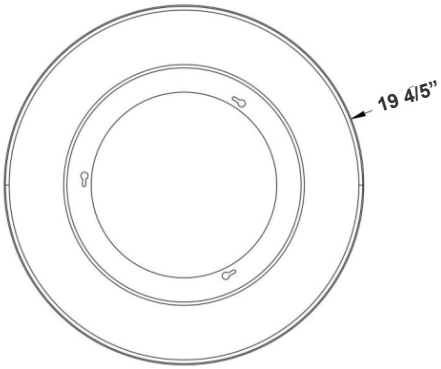

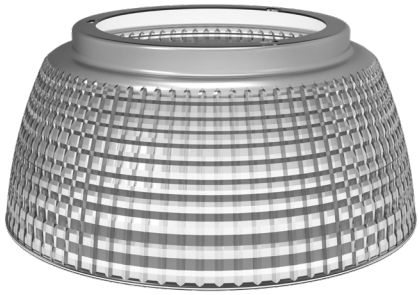

UHX-G2-PCR-A
UHX SERIES PRISMATIC PC
REFLECTOR FOR G2 150W

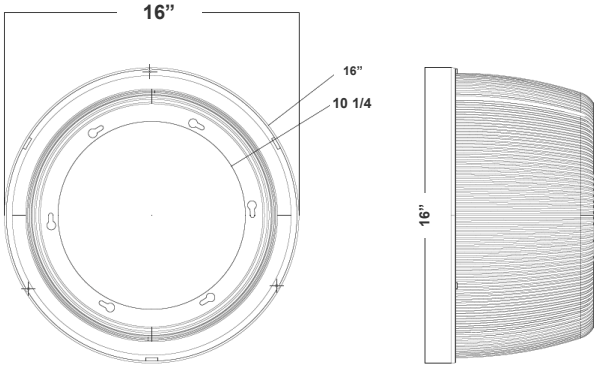



UHX-SMB
UHX SERIES SURFACE MOUNTING
YOKE BRACKET

