WESTGATE
America's Most **Dependable** Lighting

UHT SERIES

INDUSTRIAL LIGHTING

UHT-200W-50K-480V

High-Temperature IP66 LED High Bay, 200W, 480V





GRAY

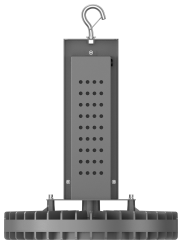

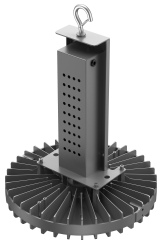

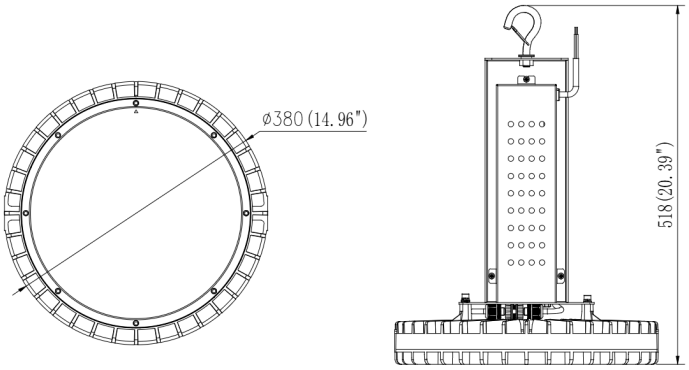

Technical Drawing: 14.96" D x 20.39" H

Customer Name:

Project Name:

Note: | Type:

• 277–480VAC, 50/60 Hz • 200W nominal wattage • Constant-current LED driver • 0–10V dimming • Power factor: >0.95 • THD: <20% @ 230V • Surge protection: 6kV L-N, 10kV L/N-E • Operating temperature: -22°F to 158°F (-30°C to 70°C)

FEATURES

- High-temperature rated for operation up to 158°F (70°C)
- IP66 rated for demanding industrial environments
- High-efficiency performance up to 160 LM/W
- IK08 impact-resistant construction
- ETL certified
- Designed with an aluminum heat sink for effective thermal management in high-temperature applications
- 5-year warranty
- Recommended for foundries, heavy industrial warehouses, equipment processing facilities, and generator facilities

SPECIFICATIONS

ELECTRICAL:

- 277–480VAC, 50/60 Hz
- 200W nominal wattage
- Constant-current LED driver
- 0–10V dimming
- Power factor: >0.95
- THD: <20% @ 230V
- Surge protection: 6kV L-N, 10kV L/N-E
- Operating temperature: -22°F to 158°F (-30°C to 70°C)

MECHANICAL:

- IP66 rated for protection against dust and water ingress
- IK08 impact resistance
- Aluminum alloy housing for efficient heat dissipation
- Powder-coated housing finish
- Tempered glass optic
- Gray finish
- Hook mounting
- Safety rope mounting provision
- Fixture dimensions: 14.96" Dia. x 20.39" H
- Fixture weight: 17.64 lbs.

LIGHTING:

- 32,000 lumens
- 5000K color temperature
- CRI 70
- Up to 160 LM/W efficacy
- 115° symmetrical beam angle
- LED3030 light source
- SDCM <5 for color consistency

Phone/Fax: (877) 805-2252
www.westgatemfg.com

PERFORMANCE TABLE

MODEL NAMES	WATTAGE	VOLTAGE	LUMENS	COLOR TEMP.	LPW
UHT-200W-50K-480V	200W	480V	32000LM	5000K	160

ACCESSORIES

MODEL NAMES	DESCRIPTION	IMAGE
UHT-PAIR-KIT	- Twin pairing kit for mounting two UHT fixtures from a single - Allows two UHT high bays to be suspended using one hook - Central junction box provides the connection point between the two - fixtures - Ideal for applications requiring increased light output from a - common mounting location	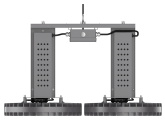

Phone/Fax: (877) 805-2252
www.westgatemfg.com