WESTGATE
America's Most Dependable Lighting

UCLB SERIES

UNDER CABINET LIGHTING

MCT

UCLB-120V-12-MCT-D

120V LED UNDER CABINET LIGHT BAR, CRI90, SELECTABLE CCT

ETL LISTED | TRIAC DIMMABLE | 5 YEAR LIMITED WARRANTY



WHITE

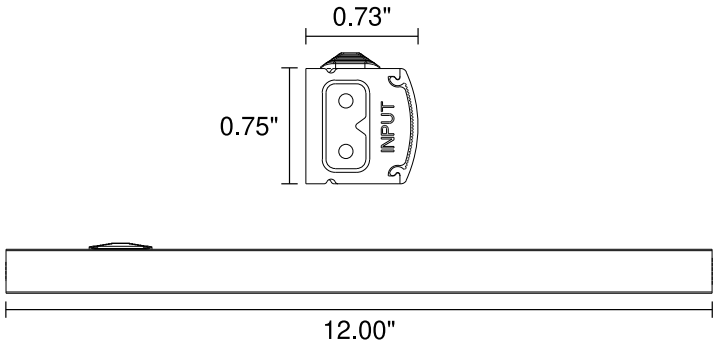

Technical Drawing: 0.73" (D) x 12.00" (W) x 0.75" (H)

LIGHTING

- 12" LED under cabinet light bar
- 4.5W
- 382lm
- 2700K / 3000K / 4000K selectable
- TRIAC dimmable
- CRI90+
- Master carton quantity: 80 pcs

APPLICATIONS

- Ideal for under cabinet lighting in kitchens, closets, workstations, display cabinets, retail shelving, and task lighting applications where high color accuracy and selectable CCT are desired.

Customer Name:

Project Name:

Note: | Type:

The UCLB Series is a slim 120V LED under cabinet light bar designed for kitchens, workstations, display shelving, and task lighting applications. Available in 12", 16", 24", and 32" lengths, the series combines TRIAC dimming, CRI90+ color rendering, and field-selectable 2700K / 3000K / 4000K color temperature in a compact linear profile. The linkable design supports continuous cabinet runs using seamless end-to-end connectors or jumper cables, with additional accessories available for angled connections, plug-in power, hardwire installation, and replacement end caps.

FEATURES

- 120V under cabinet light bar with no remote driver required
- TRIAC dimmable for residential and commercial control compatibility
- 3CCT selectable for field-adjustable warm to neutral white lighting
- CRI90+ for improved color rendering on countertops, cabinets, and display surfaces
- Slim profile for low-visibility under cabinet installations
- Linkable design for continuous cabinet runs
- Seamless end-to-end connector available
- Jumper cable accessories available in 6", 18", and 24" lengths
- Plug-in or hardwire installation options
- ETL listed
- Conforms to UL STD. 153 and 1598
- Certified to CSA STD. C22.2 No. 250.4
- 5-year warranty

SPECIFICATIONS

ELECTRICAL

- 120VAC, 60Hz
- TRIAC dimmable
- Available wattages: 4.5W, 6W, 9W, 12W
- Linkable system with 100W maximum connected load
- Plug-in power available with 10' power cord accessory
- Hardwire installation available with junction box accessory
- 50,000-hour lifetime

MECHANICAL

- Compact linear under cabinet light bar
- White finish
- Available lengths: 12", 16", 24", 32"
- Surface mount installation with clips
- 12" and 16" fixtures require two mounting clips
- 24" and 32" fixtures require at least three mounting clips
- Input and output sides are direction-specific
- End cap required at the open end when no additional fixture is connected
- Junction box accessory includes side conduit entry for hardwire installation
- Suitable for indoor damp locations
- Not for wet locations

Phone/Fax: (877) 805-2252
www.westgatemfg.com

PERFORMANCE TABLE

MODEL NAMES	WATTAGE	VOLTAGE	LUMENS	COLOR TEMP.	LPW
UCLB-120V-12-MCT-D	4.5W	120V	382lm	2700K 3000K 4000K	85

ACCESSORIES

MODEL NAMES	DESCRIPTION	IMAGE
UCLB-120V-DCON	**End-to-end direct connector** - Seamless connection between fixtures, no gap - Inner quantity: 1 pc - Master carton quantity: 1000 pcs	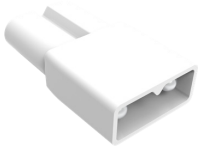
UCLB-120V-JUMP6	**6" jumper cable** - Connects fixtures with spacing between units - Inner quantity: 1 pc - Master carton quantity: 100 pcs	
UCLB-120V-JUMP18	**18" jumper cable** - Connects fixtures with spacing between units - Inner quantity: 1 pc - Master carton quantity: 100 pcs	
UCLB-120V-JUMP24	**24" jumper cable** - Connects fixtures with spacing between units - Inner quantity: 1 pc - Master carton quantity: 100 pcs	
UCLB-120V-SWIVEL-L	**Lighted L swivel connector** - 3W, 180lm, 2700K / 3000K / 4000K selectable - TRIAC dimmable, CRI90+ - Connects angled fixture runs while adding illumination - Master carton quantity: 50 pcs	
UCLB-120V-POWCORD-10FT	**10' power cord with switch** - Plug-in power for UCLB under cabinet fixtures - Inner quantity: 1 pc - Master carton quantity: 100 pcs	
UCLB-120V-ENDCAP	**Replacement end cap** - Covers the open fixture end when no additional fixture is connected - Inner quantity: 1 pc - Master carton quantity: 500 pcs	
UCLB-120V-JB	**Junction box without switch** - Hardwire power for UCLB under cabinet fixtures - Side conduit entry - Inner quantity: 1 pc - Master carton quantity: 100 pcs	

Phone/Fax: (877) 805-2252
www.westgatemfg.com