WESTGATE
America's Most **Dependable** Lighting

SOLN SERIES

OUTDOOR LIGHTING

SOLN-25W-30K
SOLN-25W-50K

HIGH-LUMEN SMART INTEGRATED SOLAR STREET AND FLOOD LIGHT, 25W, 3000K OR 5000K

WET LOCATIONS



LIGHT GRAY

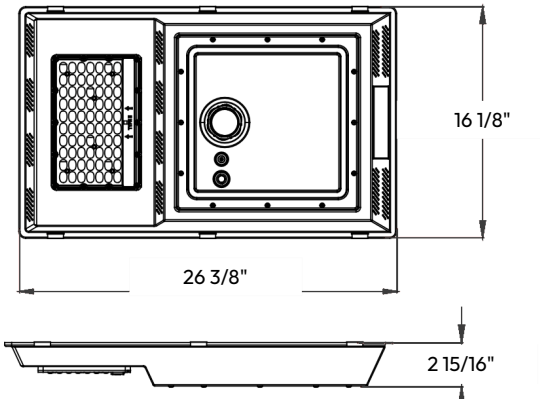

Technical Drawing: 26 3/8" (L) x 16 1/8" (W) x 2 15/16" (H)

ACCESSORY

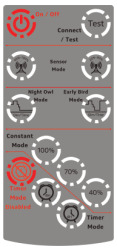

SOLF-RC: Remote control for SOLN Series
Remote not included, order 1 per project;
1 remote controls all fixtures.
See remote control instructions on the last page.

Customer Name:

Project Name:

Note: | Type:

The SOLN-25W is a high-lumen smart integrated solar street and flood light with no wiring required. A 25W LED delivers 3750lm at 150lm/W in 3000K or 5000K, powered by an integrated 40W solar panel and LiFePO4 battery. Ideal for general site lighting, alleys, loading docks, doorways, pathways and parking areas.

FEATURES

- Integrated solar panel and LiFePO4 battery, no wires
- Smart lighting controller with remote-selectable modes (remote not included)
- Type II optic lens
- Galvanized steel with light gray powder coat finish
- 7-year warranty

SPECIFICATIONS

ELECTRICAL

- Solar Panel Wattage: 40W
- LED Wattage: 25W

BATTERY

- Battery Type: LiFePO4
- Battery Life: More than 2000 cycles, with overcharge and over-discharge protection
- Charge Time to Full: 4 to 10 hours, depending on sunlight quality (see map)
- Operation on Full Charge: 14 hours at 100% brightness

MECHANICAL

- Housing: Galvanized steel with powder coat finish, light gray
- Arm: Steel with powder coat finish, light gray
- Dimensions: 26 3/8" (L) x 16 1/8" (W) x 2 15/16" (H)
- EPA: 2.3ft²
- Wiring: No wires
- Operating Temperature: -4°F to 122°F
- IP65, Suitable for Wet Locations
- Warranty: 7-year

LIGHTING

- LED: Lumileds 2835
- Total Lumens: 3750lm
- Efficacy: 150lm/W
- Color Temperature: 3000K or 5000K
- CRI ≥70
- Optics: Type II lens
- Rated Life: 70,000 hours

APPLICATIONS

- General site lighting, alleys, loading docks, doorways, pathways and parking areas

OTHER MODELS

- 10W | 1500lm | SOLN-10W-30K-WA / SOLN-10W-50K-WA
- 30W | 6000lm | SOLN-30W-30K / SOLN-30W-50K
- 50W | 10000lm | SOLN-50W-30K / SOLN-50W-50K
- 70W | 14000lm | SOLN-70W-30K / SOLN-70W-50K

Phone/Fax: (877) 805-2252
www.westgatemfg.com

PERFORMANCE TABLE

MODEL NO.	SOLAR PANEL	LED WATTAGE	LUMENS	COLOR TEMP.	LPW
SOLN-25W-30K SOLN-25W-50K	40W	25W	3750lm	3000K 5000K	150

PHOTOMETRICS SOLN-25W

BUG rating

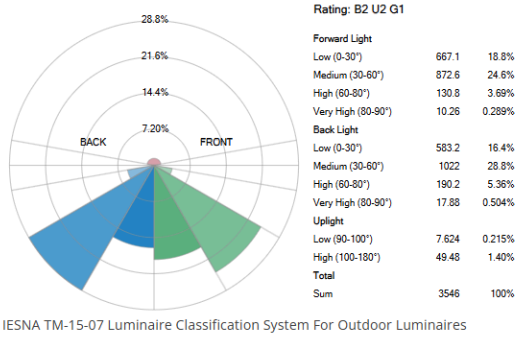

IESNA TM-15-07 Luminaire Classification System For Outdoor Luminaires

BUG Rating: B2-U2-G1

Iso-illuminance plot

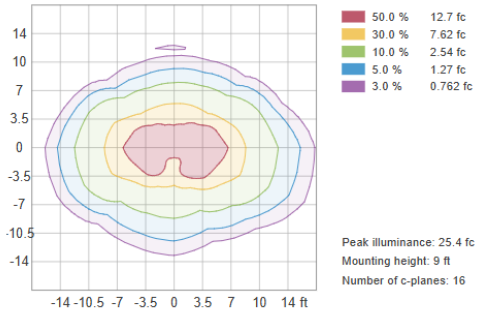

25W, 5000K | Area: 14' x 14' | Mounting Height: 9'

OTHER VIEWS



CLOSE VIEW

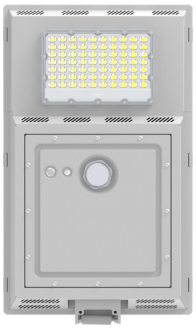

FRONT VIEW



BACK VIEW
SHOWN WITH SLIP FITTER (NOT INCL.)

ACCESSORIES (SOLD SEPARATELY)

MODEL NO.	DESCRIPTION	IMAGE
SOLN-WM	Wall mounting accessory	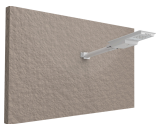
SOLN-PMRS	Round and square pole mounting accessory	
SOLN-SFA	Slip fitter mounting accessory	

Phone/Fax: (877) 805-2252
www.westgatemfg.com

MOUNTING DRAWINGS

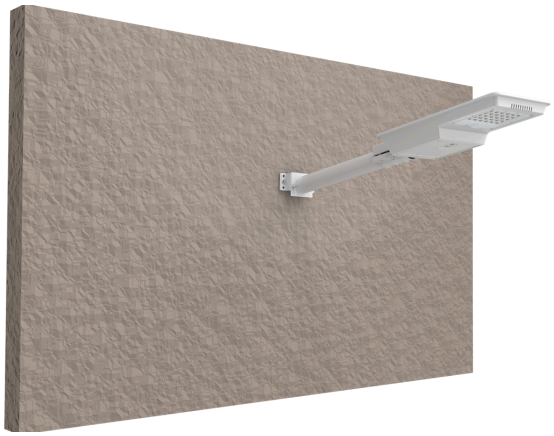

Wall Mounting

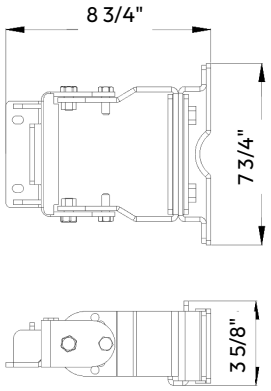

8 3/4" (W) x 7 3/4" (H) x 3 5/8" (L)



Round and Square Hoop

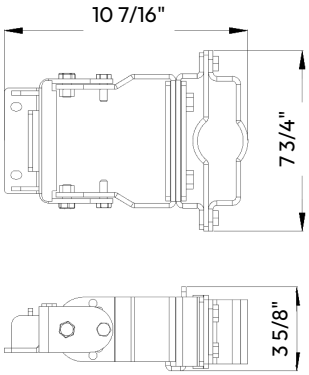

10 7/16" (W) x 7 3/4" (H) x 3 5/8" (L)

Phone/Fax: (877) 805-2252
www.westgatemfg.com

WESTGATE
America's Most **Dependable** Lighting

AVERAGE DAILY SOLAR RADIATION PER MONTH

Increasing the tilt 15° in the winter or decreasing 15° in the summer gives the maximum sunlight for recharging the battery.

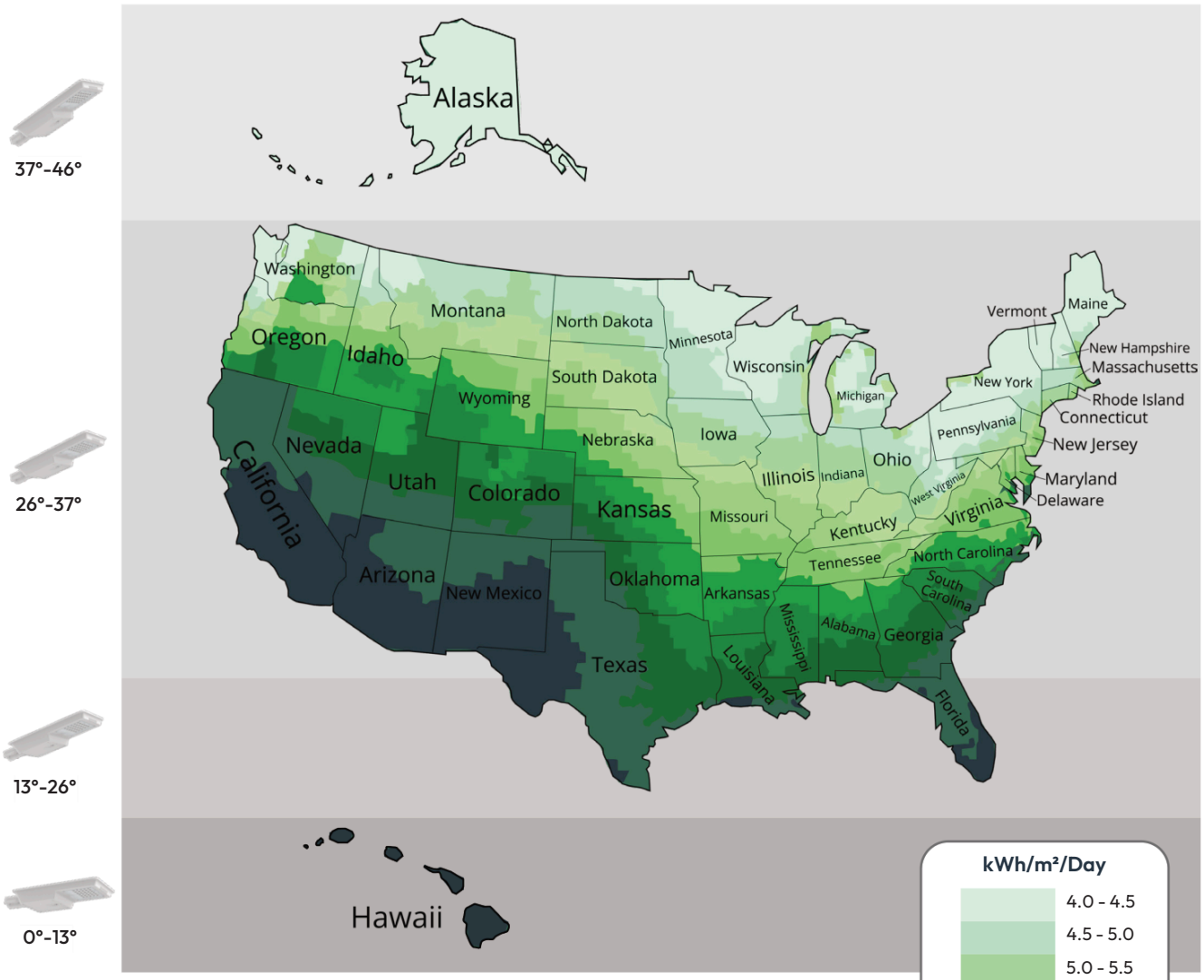

- The best facing direction for the solar panel is toward the south. Facing west, east or north provides less sunlight, resulting in a longer time to charge the battery; the solar charge is least optimal if the installation faces north.

Phone/Fax: (877) 805-2252
www.westgatemfg.com

REMOTE CONTROL (SOLF-RC)

Remote control not included, must be purchased separately: 1 per project.

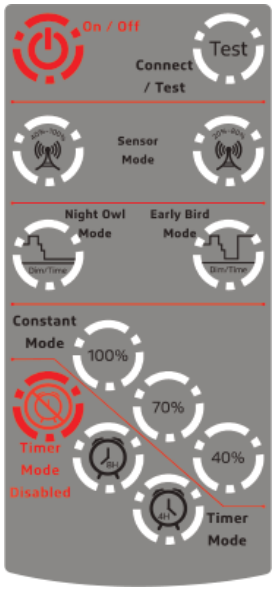

1. ON/OFF
2. Test
3. Induction Mode
4. Induction Mode (Default)
5. Night Owl Mode
6. Early Bird Mode
7. Constant Mode 100%
8. Constant Mode 70%
9. Timer Mode Disabled
10. Constant Mode 40%
11. Timer Mode 4 Hours
12. Timer Mode 8 Hours

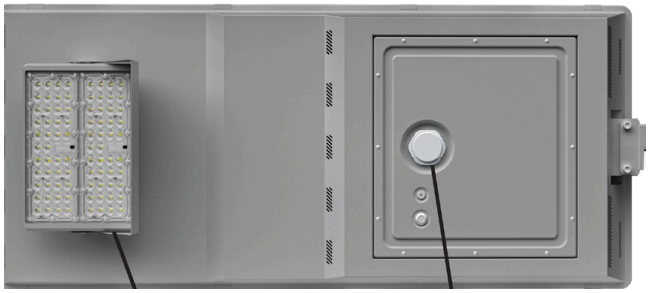

Light-emitting module | Red and green indicator

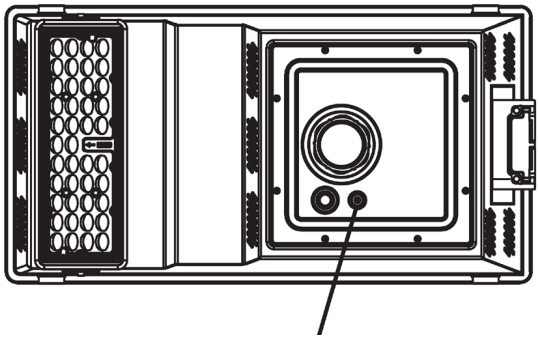

Switch and indicator light; charging port DC 4.2V 2A

FUNCTION

1. ON/OFF: When ON/OFF is pressed, the indicator blinks red if the fixture is fully charged and ready to work. The indicator blinks green if the battery power is less than 10%. If the indicator does not blink upon restart, contact the manufacturer.

2. Test: To sync the remote control with the fixture, press and hold for 3 seconds, then release. To test, press once. If the test is successful, the fixture lights up to full brightness, dims down, and prepares for the next steps. If unsuccessful, the fixture is either out of charge or turned off. Testing lasts 10 seconds, then the fixture returns to the previous mode.

3. Induction Mode 40% - 100%: Constant 40% brightness (on at dusk, off at dawn); goes to 100% brightness for 30 seconds when motion is detected.

4. Induction Mode 20% - 80% (Default): Constant 20% brightness (on at dusk, off at dawn); goes to 80% brightness for 30 seconds when motion is detected.

5. Night Owl Mode: Based on night-time activities: 70% brightness for hour 0 (dusk)-0.5, 100% for hours 0.5-3.5, 70% for hours 3.5-4.5, 50% for hours 4.5-5.5, 20% for hours 5.5-11 (dawn).

6. Early Bird Mode: Based on night-time activities with increased brightness for early risers: 70% brightness for hour 0 (dusk)-0.5, 100% for hours 0.5-3.5, 70% for hours 3.5-4.5, 50% for hours 4.5-5.5, 20% for hours 5.5-10, 70% for hours 10-11 (dawn).

7. Constant Mode 100%: 100% brightness from dusk to dawn. Suitable for areas and seasons with sufficient sunlight.

8. Constant Mode 70%: 70% brightness from dusk to dawn. Suitable for areas and seasons with sufficient sunlight.

9. Timer Disabled: Turns off Timer Mode; settings go back to the previous mode set before Timer Mode.

10. Constant Mode 40%: 40% brightness from dusk to dawn. Suitable for areas and seasons with sufficient sunlight.

11. Timer Mode 4 Hours: Light turns off 4 hours after it turns on (dusk). For example, if the light turns on at 7pm it turns off at 11pm. Repeats daily until canceled with Timer Disabled.

12. Timer Mode 8 Hours: Light turns off 8 hours after it turns on (dusk). For example, if the light turns on at 7pm it turns off at 3am. Repeats daily until canceled with Timer Disabled.

- The range of the remote control to the indicator is 16' (daytime) to 33' (nighttime). Because sunlight affects the remote signal, set up the mode before installing the light.

Phone/Fax: (877) 805-2252
www.westgatemfg.com