SDL SERIES

RESIDENTIAL LIGHTING

WESTGATE
THE FUTURE IS HERE...AND IT'S QUITE BRIGHT!

SDL6-BF-MCT5



Selection:

MCT5

LED retrofit trim have been designed to be a flexible lighting solution for retrofit applications, Ideal for closets,storage areas, attics, corridors, or general lighting solutions for residential and commercial applications

Customer Name:

Project Name:

Note: | Type:

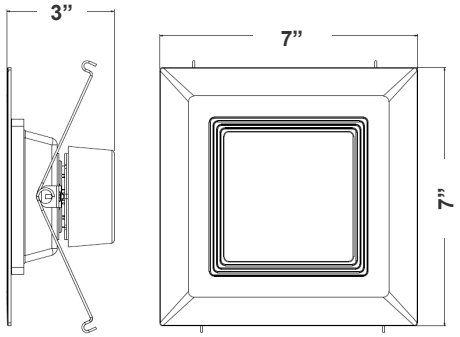

7” x 3”

Features

- 6” Baffle Recessed Trim
- Multi CCT (Selectable Switch on the Back of the driver)
- Isolated Driver for Improved Thermal Management
- 5-Year Warranty
- Spun Aluminum with White Powder Coat Finish

Technical Specifications

Electrical:

- Voltage: 120V AC
- Output Voltage: 36VDC
- Power Factor: >0.90
- Wattage: 15W
- Efficacy: 82 LPW
- Total Harmonic Distortion: ≤15 %

Mechanical:

- Spun Aluminum with White Powder Coat Finish
- Includes 8” Medium Base E-26 Screw-in Adapter That Fits any Standard Incandescent Down-light
- Maximum Ambient Temperature: 104°F
- Fits in Standard 6” Recessed Housings
- Rated life: 50,000 hrs
- Damp Location

Lighting:

- Dimming: TRIAC Dimming(Using Standard TRIAC LED Dimmers)
- LED: Epistar Chip (COB) and Driver—35,000-hour Design Life
- Can Rotate after Installation to Align
- Optics: White Translucent Acrylic Lens
- Total Lumens: 825 LM Max.
- Multi Color Temperatures: 2700K/ 3000K/ 3500K/ 4000K/ 5000K
- Multi CCT(Selectable Switch on the Back of the Driver)
- Color Rendering Index: CRI ≥ 90

Applications:

- LED retrofit trim have been designed to be a flexible lighting solution for retrofit and new construction applications, Ideal for closets,storage areas, attics, corridors, or general lighting solutions for residential and commercial applications

Other Models:

- 10W | 692LM | SDL4-BF-MCT5

Phone: (877) 805-2252 | Fax: (877) 805-2252
www.westgatemfg.com | www.westgatecontrols.co

WG-ZY-Z4-2Z

Photometrics: SDL6-BF-MCT5

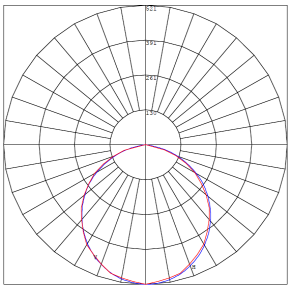

BUG Rating: B1-U2-G0

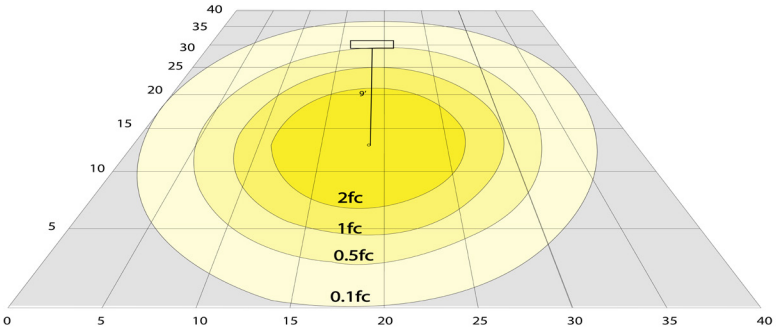

Area 40'x 40' Mounting Height: 9'

Other Views:

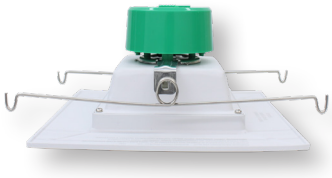

Side View



Front View



Back View

Performance Table: SDL6-BF-MCT5

MODEL NO.	Wattage	Voltage	Lumens	Color Temp.	BUG Rating	LPW
SDL6-BF-MCT5	15W	120V	794LM	2700K	B1-U2-G0	79
			794LM	3000K		79
			887LM	3500K		88
			887LM	4000K		88
			825LM	5000K		82

Sample Ordering

Model	Style	Color Temp.
SDL6	BF	MCT5

Accessory:

Blank = No Option For Accessories
E26-CONVERTER = SCREW-IN ADAPTER THAT FITS ANY STANDARD

Factory-Installed Option:

Blank = No Option For Accessories
OPT-EM-DL1EXT = EXTERNAL BATTERY BACKUP

ACCESSORY:



E26-CONVERTER
Includes Medium Base E-26 Screw-in Adapter That Fits Any Standard

FACTORY-INSTALLED OPTION:



OPT-EM-DL1EXT
EXTERNAL BATTERY BACKUP

Example:

1. SDL6-BF-MCT5 (FOR SDL6 15W MCT5 FIXTURE 120V)

2. SDL6-BF-MCT5 (FOR SDL6 15W MCT5 FIXTURE 120V)
   OPT-EM-DL1EXT (EXTERNAL BATTERY BACKUP)

Phone: (877) 805-2252 | Fax: (877) 805-2252
www.westgatemfg.com | www.westgatecontrols.co

Compatible Dimmer List:

MODEL NO.	BRAND	MODEL NO.	BRAND
LUXDM600-12 600W	ALMOND	S-600-IV 600W	LUTRON
SDM3/1000/WHTTE 1000W	AH	S-600-AL 600W	LUTRON
SDM/600/WHTTE 600W	AH	D-600R-IV 600W	LUTRON
18024 600W	GE	DV-603PH-WH 600W	LUTRON
6683 600W	LEVITON	S-603PH-WH 600W	LUTRON
6631-LA 600W	LEVITON	AY-600P-WH	LUTRON
LIGHT ALMOND NO.6672 600W	LEVITON	AYCL-153PH	LUTRON
603-6631-A 600W	LEVITON	SELV-300P-WH	LUTRON
6631-A 600W	LEVITON	DV-600P-WH	LUTRON
White/Ivory/Light Almond IPI10-1LZ 600W	LEVITON	SCL-153PH-WH	LUTRON
DV-603P600W	LUTRON	MACL-153MH-WH	LUTRON
S-600 600W	LUTRON	DVCL-253PH	LUTRON
DV-603PH-WH 600W	LUTRON	MSCL-OP153MH-WH	LUTRON
DV-600PH-WH 600W	LUTRON	MACL-153MLH-WH	LUTRON
S-603PGH-WH 600W	LUTRON	6683 600W	LEVITON
S-10PH 1000W	LUTRON	6631-LA 600W	LEVITON
D-600RH-DK 600W	LUTRON	LIGHT ALMOND NO.6672 600W	LEVITON
TG-600PH-WH 600W	LUTRON	603-6631-A 600W	LEVITON
SCL-153P-WH 600W	LUTRON	6631-A 600W	LEVITON
D-600R-WH 600W	LUTRON	White/Ivory/Light Almond IPI10-1LZ 600W	LEVITON