SCX1.5 SERIES

Commercial Lighting

WESTGATE
THE FUTURE IS HERE...AND IT'S QUITE BRIGHT!

SCX1.5-L2FT-UD-MCTP5
SCX1.5-L2FT-UD-MCTP5-BK
MCT Multi Color Temperature (Selectable)

Customer Name:
Project Name:
Note: | Type:

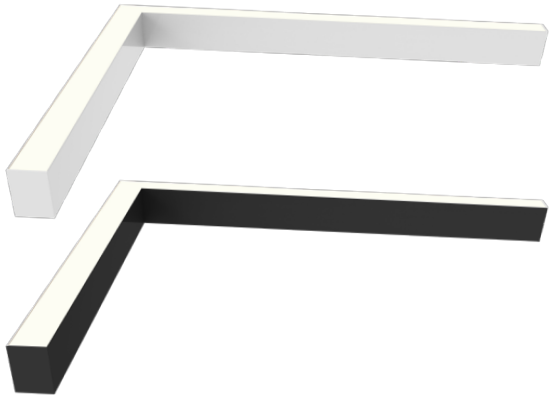

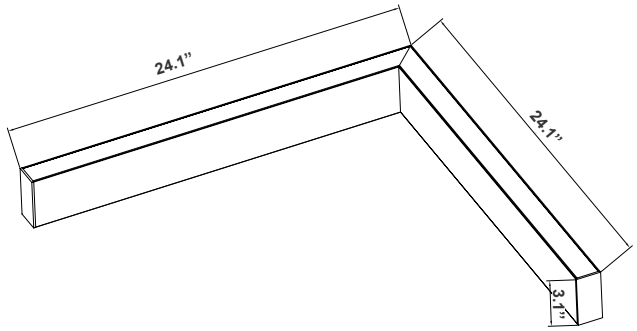

24.1"(L) x 24.1"(W) x 3.1"(H)

The SCX series offers the best and the most comprehensive selection for linear lighting. The various available lengths and widths allow the creation of the desired shape to elevate the areas aesthetics to a unique and modern look while providing an impressive illumination for the occupants. Ideal for, retail locations, offices, lobbies, conference rooms, reception areas, hallways, educational facilities, hotels, and restaurants. FEATURES: Superior Architectural Look Energy-efficient: Low Wattage Consumption & High Lumen Output Easier Wire Management & Install Variety of Mounting Options Multi Color Temperature (Selectable Switch Inside Fixture) Variety Of Factory Customizations Available

Features

- LED Superior Architectural Lights
- Seamless Linkable Linear Lighting System
- Opal Polycarbonate Lens-Direct (DOWN) Lighting
- Optional Recessed & Wall Mounting Kits Available
- Optional Louver Version Lens Available
- Lens Type: Opal Polycarbonate Lens
- MCT: Multi Color Temperature (Selectable with Switch Inside Fixture)

Technical Specifications

Electrical:

- Voltage: 120-277VAC 50/60Hz
- Wattage: 16W/22W/26W/30W
- Power Factor: >0.95
- Total Harmonic Distortion: ≤ 20 %
- Efficacy: 110 LPW

Mechanical:

- Low Profile Modern Design
- Aluminum Housing With Matte White Finish
- Custom Colors Available
- Lens Snaps into Housing
- Make Different Connections Via T/L/X Joints on Both Ends
- Mounting Options: Surface, Suspended (when connected to other SCX fixtures), Wall, Recessed
- IP Rating: IP54
- Operating Temperature: -13°F~104°F
- Adjustable Suspension Brackets Provided on Top of The Fixtures
- 5-Year Warranty

Lighting:

- Dimmable: 0-10V Dimming Down to 5%
- Total Lumens: 3300LM
- Color Temperatures: 2700K/3000K/3500K/4000K/5000K
- Multi-CCT(Selectable with Switch Inside the Fixture)
- Color Rendering Index: CRI ≥ 80
- Up Light Option Available
- Beam Angle: 104.8°(H) x 100.5°(V)
- 50,000 Hours Rated Life

Applications:

- Ideal for offices, hotels, corridors, saloons, libraries, meeting rooms, conference halls, and the best solution for modern lighting solutions
- It can be used in any indoor applications

UL LISTED | DIMMING 1-10V | IP54 | 5 YEAR

Phone: (877) 805-2252 | Fax: (877) 805-2252
www.westgatemfg.com

WG-ZY-26-2Z

Photometrics: SCX1.5-L2FT-UD-MCTP5

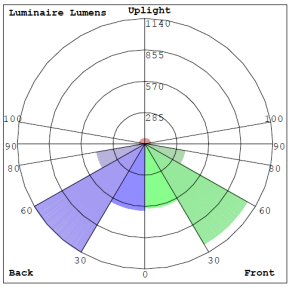

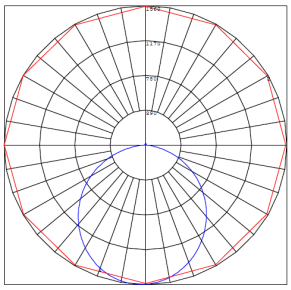

BUD Rating: B2-U2-G1

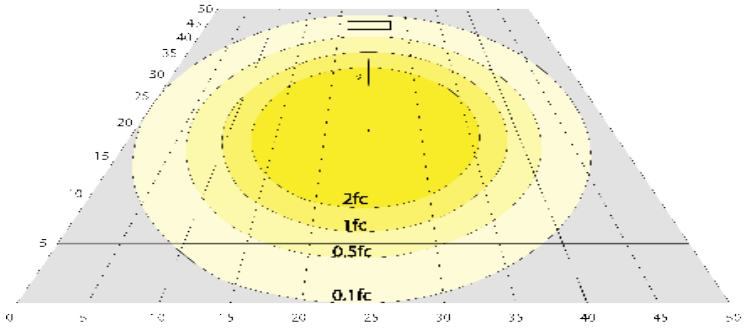

Area 50'x 50' Mounting Height: 9'

Performance Table: SCX1.5-L2FT-UD-MCTP5

MODEL NO.	Wattage	Voltage	Lumens	Color Temp.	BUG Rating	LPW
SCX1.5-L2FT-UD-MCTP5 SCX1.5-L2FT-UD-MCTP5-BK	16W 22W 26W 30W	120~277V	1760LM 2200LM 2860LM 3300LM	2700K 3000K 3500K 4000K 5000K	B2-U2-G1	110

Sample Ordering

Model		Size		Uplight		Color Temp.		Finish
SCX1.5	-	L2FT	-	UD	-	MCT5	-	

Blank = White
BK = Black

Accessories:

Blank = No Option For Accessories
SCL-6FT-SJTW18/5 = 6ft White Cord, SJTW 18 AWG 5-Conductor (Black, White, Green + Purple & Gray for 0-10V Dimming)
SCL-6FT-SJTW18/5-100FT = 100ft Roll of White Cord, SJTW 18 AWG 5-Conductor (Black, White, Green + Purple & Gray for 0-10V Dimming)
SCL-6FT-SJTW18/5-100FT-BK = 100ft Roll of Black Cord, SJTW 18 AWG 5-Conductor (Black, White, Green + Purple & Gray for 0-10V Dimming)
SCL-6FT-SJTW18/6-100FT = 100ft Roll of Black Cord, SJTW 18 AWG 6-Conductor (Black, White, Green + Purple & Gray for 0-10V Dimming + Red for Backup Inverter)

*** More Mounting Options Refer to page 4**

Factory-Installed Options:

Blank = No Option For Accessories
OPT-HBC-125BS-WH = 10FT, 15A, 125V, 18/3 STR, WHT

ACCESSORIES:

SCL-6FT-SJTW18/5-100FT
SCL-6FT-SJTW18/6-100FT

SCL-6FT-SJTW18/5-100FT-BK

SCL-6FT-SJTW18/5

FACTORY-INSTALLED OPTIONS:

OPT-HBC-125BS-WH

Phone: (877) 805-2252 | Fax: (877) 805-2252
www.westgatemfg.com

MOUNTING AND MODULES OPTIONS:

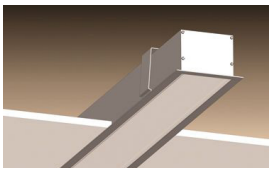

Recessed Mounted
(Flanged)

Surface Mounted

Wall Mounted

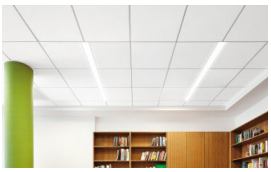

T-Bar Installation

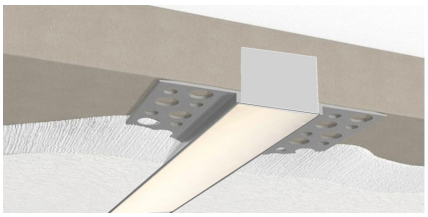

Flangless Recessed Mounted
(Mud-In)

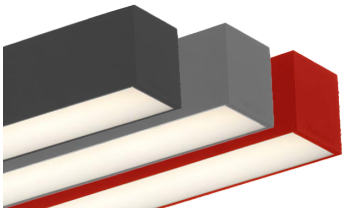

Color of Your Choice

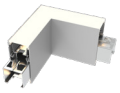

L Module

SCX1.5-L-UD-MCT5

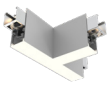

T Module

SCX1.5-T-UD-MCT5

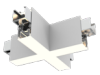

X Module

SCX1.5-X-UD-MCT5

Inside Corner Module

SCX1.5-IC-UD-MCT5

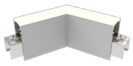

120º Corner Module

SCX1.5-C120-UD-MCT5

Y Module

SCX1.5-Y-UD-MCT5

6in Module

SCX1.5-GIN-UD-MCTS

9in Module

SCX1.5-9IN- UD-MCT5

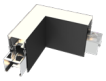

L Module

SCX1.5-L-UD-MCT5-BK

T Module

SCX1.5-T-UD-MCT5-BK

X Module

SCX1.5-X-UD-MCT5-BK

Inside Corner Module

SCX1.5-IC-UD-MCT5-BK

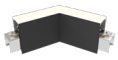

120º Corner Module

SCX1.5-C120-UD-MCT5-BK

Y Module

SCX1.5-Y-UD-MCT5-BK

6in Module

SCX1.5-GIN-UD-MCTS-BK

9in Module

SCX1.5-9IN- UD-MCT5BK

Phone: (877) 805-2252 | Fax: (877) 805-2252
www.westgatemfg.com

MOUNTING OPTIONS:

FLANGLESS RECESSED INSTALLATION IN WOOD CEILING

No additional accessories required.
Make recessed preparations by installing a horizontal plank of wood on top of the wood ceiling at a recessed height of 3 3/8".
Screw and anchor kit provided with each fixture can be used to fasten the top
of the fixture to the wood plank through the holes on top of the fixture.
You can also install vertical wood boards on top of the ceiling at the edge of the opening and open the fixture and put screws through the side of the

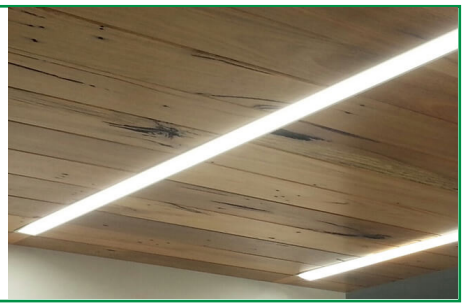

SUSPENSION ROD KITS (SET OF 2)

Model	SIZE
SCL-RS-12	12 IN
SCL-RS-18	18 IN
SCL-RS-24	24 IN
SCL-RS-36	36 IN
SCL-RS-48	48 IN

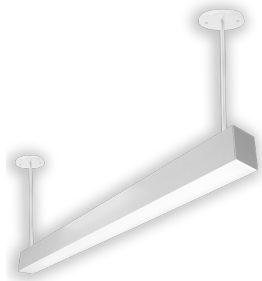

RECESSED MOUNT WITH FLANGE

Model	DESCRIPTION
OPT-SCX-FMR-4FT	Order this option and the fixture will be equipped with a 1/2" wide flange on four sides. Advanced design toggle-style brackets will also be provided, to adjust and hold the fixture against drywall or other hard ceilings from the top. When linking to another fixture or corner module, call us or send a copy of your plan along with your PO, and flanges will be removed on those ends that need to make a

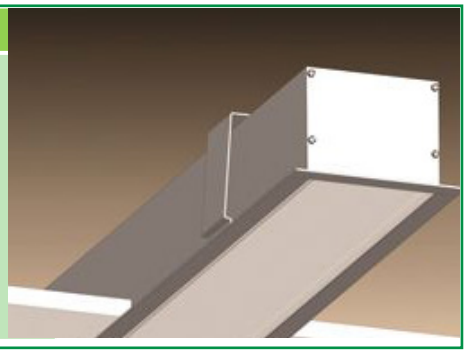

FLANGELESS RECESS MOUNT IN DRYWALL (MUD-IN)

Model	DESCRIPTION
OPT-SCX-MIF-4FT	Order this option and the fixture will be equipped with mud-in brackets on all four sides, mounted at 1/16" from the lens surface (specify if other spacing is needed). Advanced design toggle-style brackets will also be provided, to adjust and hold the fixture against the drywall ceiling from the top. When linking to another fixture or corner fixture module call us or send a copy of your plan along with your PO and flanges will be removed on those end that needs to make a seamless connection.
OPT-SCX1.5-MIF-L	This is a L Module option.
OPT-SCX1.5-MIF-T	This is a T Module option.
OPT-SCX1.5-MIF-X	This is a X Module option.
OPT-SCX1.5-MIF-IC	This is a Inside Corner Module option.

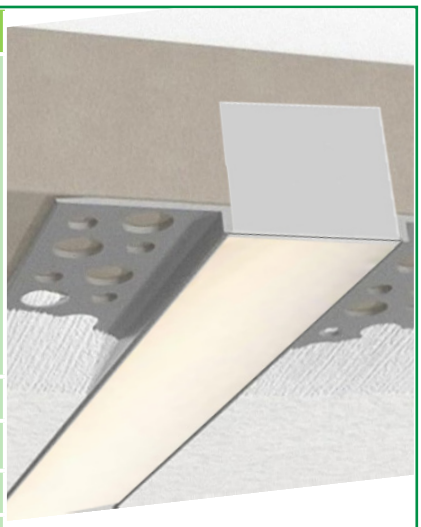

T-BAR INSTALLATION

Model	DESCRIPTION
OPT-SCX1.5-TBAR-4FT	Add this option and 1/2" wide flanges will be installed on the two long sides of the fixture. The two ends of the fixture will fall onto the T-bar grids and will be supported this way. The T-bar tiles on the two sides of the fixture must be cut to allow for the width of the fixture. The tile will fall onto and be supported by the flanges on both sides of the fixture. If you plan to support the fixture by the grids on three sides and tile on one side, call us or specify on your PO, and flange will be installed only on one side of the fixture. To provide safety and support from the beams above the T-bar ceiling order 10ft or 20ft
SCL-GS10	Adjustable 1/16" 10ft suspension kit with loop gripper & toggle ends hold up to 70 lbs load.
SCL-GS20	Adjustable 1/16" 20ft suspension kit with loop gripper & toggle ends hold up to 70 lbs load.
OPT-FWH-63 OPT-FWH-65 OPT-FWH-66	This is a 6FT 3-Wire Whip option. This is a 6FT 5-Wire Whip option. This is a 6FT 6-Wire Whip option.

SURFACE MOUNTING

No additional accessories required.
Screw and anchor kit provided with each fixture can be used to fasten the fixture directly to the hard surface through the holes on top of the fixture.

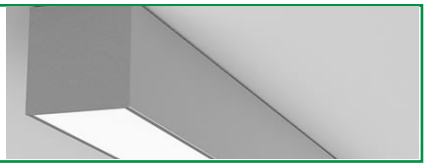

FACTORY-INSTALLED OPTIONS:

EMERGENCY BATTERY BACKUP

Model	DESCRIPTION
OPT-EM-CM1INT	This is an option for a 90-minute backup battery installation. If you need to order this series for the fixture, please have your purchase order ready and call us or specify on the order which fixture to install this option and the test button.

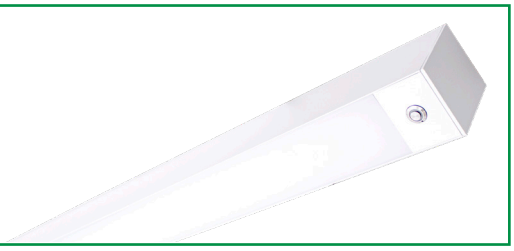

BI-LEVEL MOTION SENSOR

Model	DESCRIPTION
OPT-SCX-SEN2US	This option installs an advanced motion sensor that will turn the lights on when the area is occupied. When the area is cleared, after a preset hold time of 5 sec or more the lights are dimmed to a standby level of 30% or more. If still no motion is detected, after the standby period, the light is turned off. All setting is programmable with a remote
OPT-WEC-3RC	This is an optional remote control for sensor.
OPT-SEN-SCX-2MRLV-5	This is a programmable microwave Bi-Level sensor.
OPT-SEN-2US-DAYLIGHT	It is an ultrasonic Bi-Level Dimming Daylight sensor option for internal installation inside the fixture. (Remote not needed)

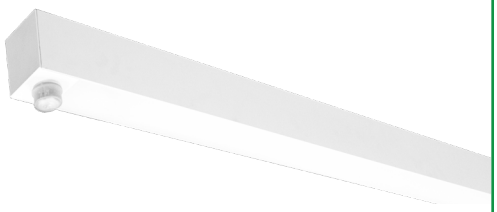

COLOR OF YOUR CHOICE

Model	DESCRIPTION
OPT-SCX-CLR-2FT	Add this option and specify your desired color on your purchase order or provide a swatch to match. For painted flanged fixture or optional rod, mounting set please also add the relevant option below for each fixture.
OPT-SCX-CLR-FRM	This is a painted flanges option.
OPT-SCX-CLR-RODSET	This is a painted rod set option.

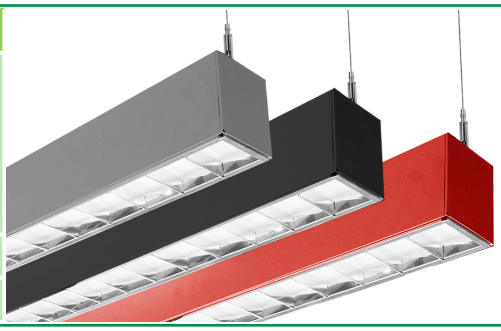

CORNER FIXTURE MODULES:

Built-in LED Modules

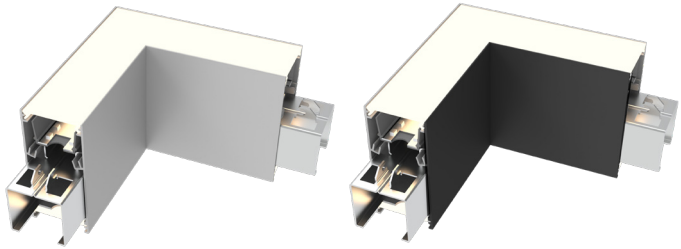

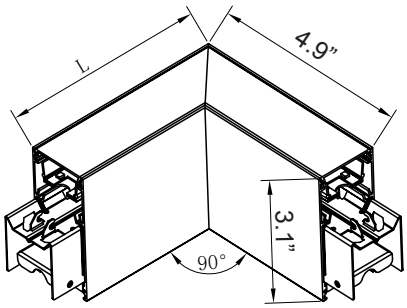

Model	JOINT TYPE	LUMENS	MCT4	DIMENSION
SCX1.5-L-UD-MCT5 SCX1.5-L-UD-MCT5-BK	L	508LM 575LM 616LM 660LM	2700K 3000K 3500K 4000K 5000K	4.9”X 4.9” X 3.1”

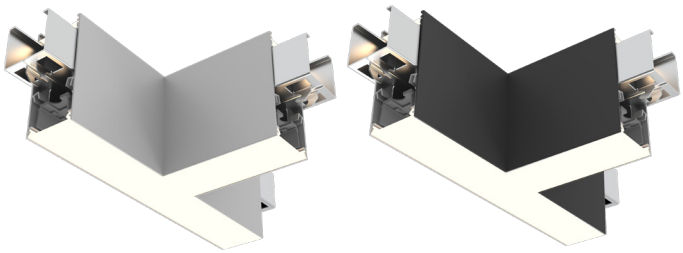

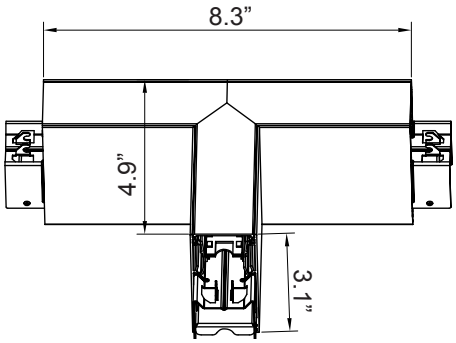

Model	JOINT TYPE	LUMENS	COLOR TEMP	DIMENSION
SCX1.5-T-UD-MCT5 SCX1.5-T-UD-MCT5-BK	T	629LM 726LM 787LM 854LM	2700kK 3000K 3500K 4000K 5000K	8.3” X 4.9” X 3.1”

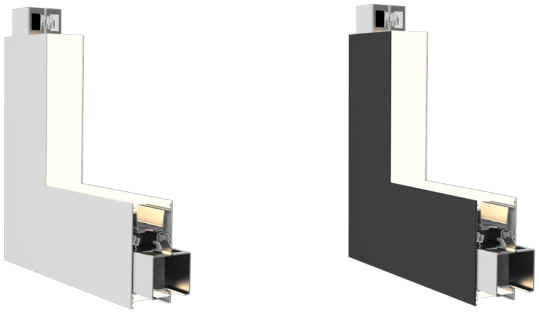

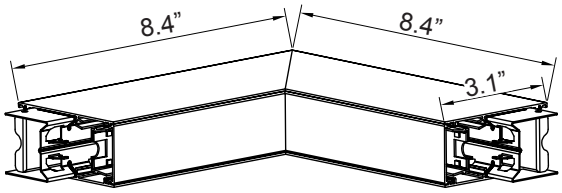

Model	JOINT TYPE	LUMENS	COLOR TEMP	DIMENSION
SCX1.5-IC-UD-MCT5 SCX1.5-IC-UD-MCT5-BK	INSIDE CORNER	629LM 726LM 787LM 854LM	2700K 3000K 3500K 4000K 5000K	8.4” X 8.4” X 3.1”

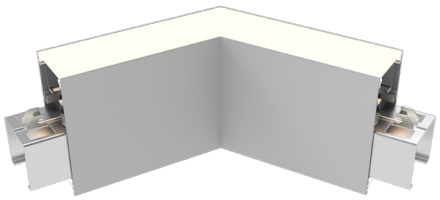

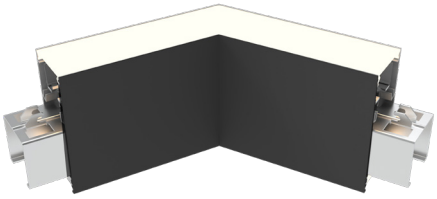

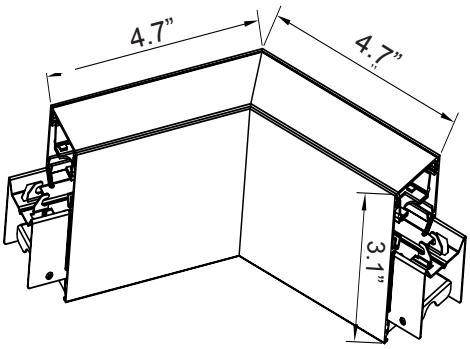

Model	JOINT TYPE	LUMENS	COLOR TEMP	DIMENSION
SCX1.5-C120-UD-MCT5 SCX1.5-C120-UD-MCT5-BK	120° CORNER	508LM 575LM 616LM 660LM	2700K 3000K 3500K 4000K 5000K	4.7” X 4.7” X 3.1”

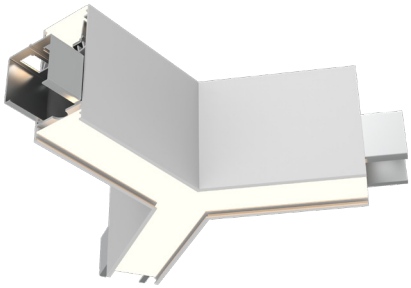

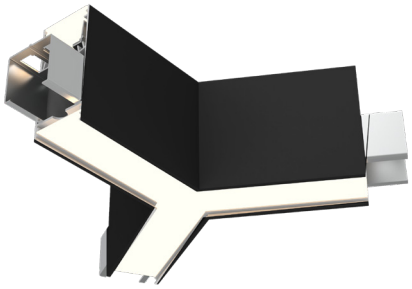

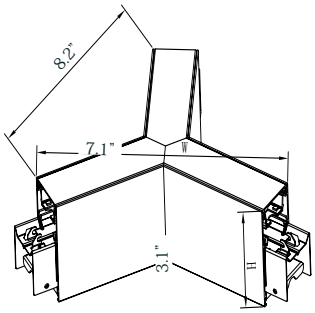

Model	JOINT TYPE	LUMENS	COLOR TEMP	DIMENSION
SCX1.5-Y-UD-MCT5 SCX1.5-Y-UD-MCT5-BK	Y	508LM 575LM 616LM 660LM	2700K 3000K 3500K 4000K 5000K	8.2” X 7.1” X 3.1”

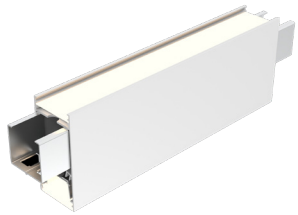

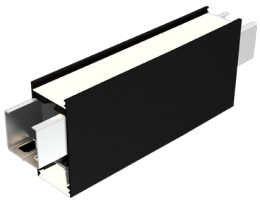

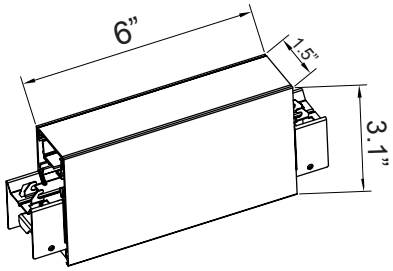

Model	JOINT TYPE	LUMENS	COLOR TEMP	DIMENSION
SCX1.5-6IN-UD-MCTS	6in Module	508LM 575LM 616LM 660LM	2700K 3000K 3500K 4000K 5000K	6” X 3.1” X 1.5”

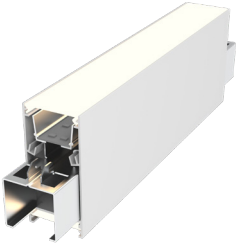

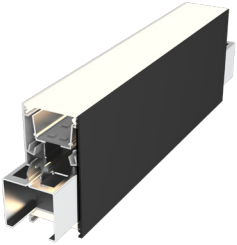

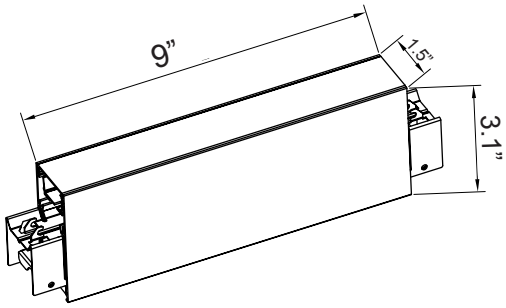

Model	JOINT TYPE	LUMENS	COLOR TEMP	DIMENSION
SCX1.5-9IN- UD-MCT5	9in Module	508LM 575LM 616LM 660LM	2700K 3000K 3500K 4000K 5000K	9” X 1.5” X 3.1”

Phone: (877) 805-2252 | Fax: (877) 805-2252
www.westgatemfg.com |

COLOR CHART: * Choose from one of our Premium Colors with no set-up fee.

Gloss:

SILVER METALLIC 70 GLOSS T357-GR105

SILVER METALLIC 30 GLOSS T353-GR06

DARK RED 90 GLOSS P009-RD02

INTERNATIONAL ORANGE 90 GLOSS T009-OG26

SAFETY ORANGE 90 GLOSS T009-OG01

YELLOW 90 GLOSS T009-YL14

YELLOW 90 GLOSS T009-YL01

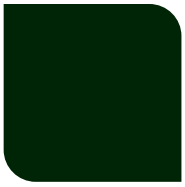
TRAFFIC GREEN 70 GLOSS T007-GN16

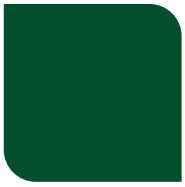
GREEN 70 GLOSS T007-GN13

GREEN 60 GLOSS C006-GN03

BLUE 90 GLOSS T009-BL01

DARK BLUE 80 GLOSS T008-BL20

RAL 8028 TERRA BROWN 90 GLOSS C209-BR358

Hammer:

WHITE HAMMER T013-WH09

BEIGE HAMMER T013-BG38

GREY HAMMER C013-GR08

SILVER HAMMERTONE T064-GR05

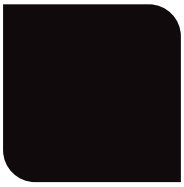
BLACK HAMMER T013-BK62

RED HAMMER T013-RD15

GREEN HAMMER T013-GN220

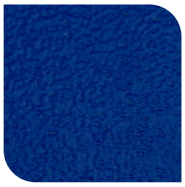
BLUE HAMMER T013-BL468

BRONZE HAMMER T012-BR161

Texture:

WHITE TEXTURE C031-WH120

FLINT GRAY TEXTURE T243-GR522

BLACK TEXTURE C241-BK109

RED TEXTURE T241-RD129

BLUE TEXTURE C241-BL544

OIL RUBBED BRONZE TEXTURE T291-BR251

Vein:

BLACK/WHITE VEIN T075-WH34

SILVER VEIN T375-BK26

COPPER VEIN EXTERIOR T075-BK211

GOLD VEIN T375-BK10

COPPER VEIN T375-BK07

Phone: (877) 805-2252 | Fax: (877) 805-2252
www.westgatemfg.com