SCX SERIES

Commercial Lighting

SCX-1FT-10W-MCT4-D

WESTGATE
THE FUTURE IS HERE...AND IT'S QUITE BRIGHT!

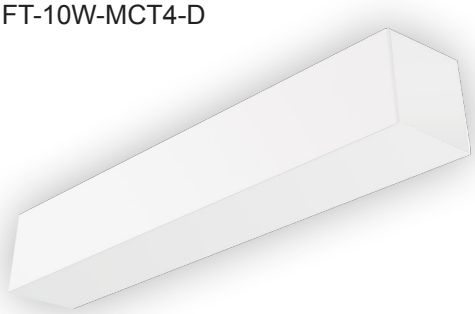

Custom:

Selection:

Customer Name:

Project Name:

Note: | Type:

The SCX series offers the best and the most comprehensive selection for linear lighting. The various available lengths and widths allow the creation of the desired shape to elevate the areas aesthetics to a unique and modern look while providing an impressive illumination for the occupants. Ideal for, retail locations, offices, lobbies, conference rooms, reception areas, hallways, educational facilities, hotels, and restaurants. FEATURES: Superior Architectural Look Energy-efficient: Low Wattage Consumption & High Lumen Output Easier Wire Management & Install Variety of Mounting Options Multi Color Temperature (Selectable Switch Inside Fixture) Variety Of Factory Customizations Available

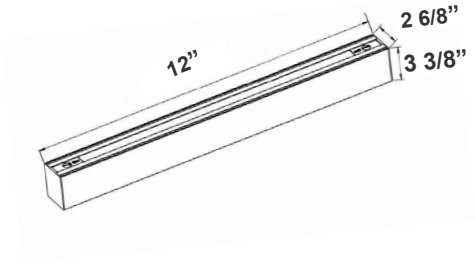

12"(L) x 2 6/8"(W) x 3 3/8"(H)

Features

- LED Superior Architectural Lights
- Seamless Linkable Linear Lighting System
- Opal Polycarbonate Lens-Direct (DOWN) Lighting
- Optional Recessed & Wall Mounting Kits Available
- Optional Louver Version Lens Available
- Lens Type: Opal Polycarbonate Lens
- MCT: Multi Color Temperature (Selectable with Switch Inside Fixture)

Technical Specifications

Electrical:

- Voltage: 120-277V AC 50/60Hz
- Wattage: 10W
- Power Factor: >0.95
- Total Harmonic Distortion: ≤ 20 %
- Efficacy: 110 LPW

Mechanical:

- Low Profile Modern Design
- Aluminum Housing With Matte White Finish
- Custom Colors Available
- Lens Snaps into Housing
- Make Different Connections Via T/L/X Joints on Both Ends
- Mounting Options: Surface, Suspended, Wall, Recessed
- IP Rating: IP54
- Operating Temperature: -13°F~104°F
- Adjustable Suspension Brackets Provided on Top of The Fixtures
- 5-Year Warranty

Lighting:

- Dimmable: 0~10V Dimming
- Total Lumens: 1100LM
- Color Temperatures: 3000K/3500K/4000K/5000K
- Multi-CCT(Selectable with Switch Inside the Fixture)
- Color Rendering Index: CRI ≥ 80
- Up Light Option Available
- 50,000 Hours Rated Life
- Beam Angle: 104.8°(H) x 100.5°(V)

Applications:

- Ideal for offices, hotels, corridors, saloons, libraries, meeting rooms, conference halls, and the best solution for modern lighting solutions
- It can be used in any indoor applications

LISTED DIMMING IP54

Phone: (877) 805-2252 | Fax: (877) 805-2252
www.westgatemfg.com

WG-Z5-ZB-2Z

Photometrics: SCX-1FT-10W-MCT4-D

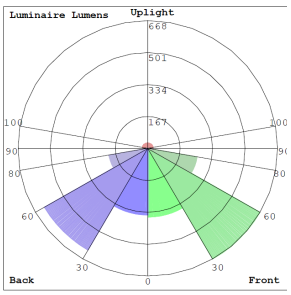

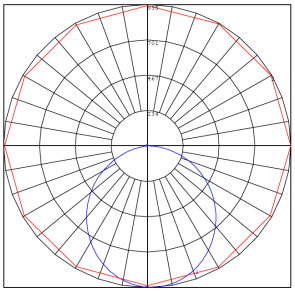

BUD Rating: B1-U2-G1

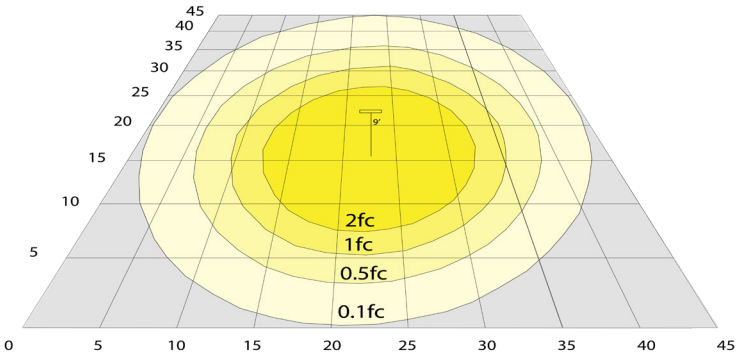

Area 45'x 45' Mounting Height: 9'

Other Views:

Side View

Front View

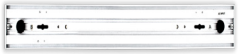

Back View

Performance Table: SCX-1FT-10W-MCT4-D

MODEL NO.	Wattage	Voltage	Lumens	Color Temp.	BUG Rating	LPW
SCX-1FT-10W-MCT4-D	10W	120~277V	1100LM	3000K 3500K 4000K 5000K	B1-U2-G1	110

Sample Ordering

Model		Size		Wattage		Color Temp.		Feature
SCX	-	1FT	-	10W	-	MCT4	-	D

Accessories:

Blank = No Option For Accessories
SCL-CS1-6FT = ADJ. 6FT 1/16in SINGLE SUSPENSION CANOPY SET WITH KEYHOLE END CONNECTOR, NON-POWER SIDE
SCL-CS1P-6FT = ADJ. 6FT 1/16in SINGLE SUSPENSION CANOPY SET WITH KEYHOLE END CONNECTOR, POWER SIDE WITH SJTW18/5 WHITE CORD
SCL-CS1P-6FT-NC = ADJ. 6FT 1/16in SINGLE SUSPENSION CANOPY SET WITH KEYHOLE END CONNECTOR
SCL-CSK-6FT = ADJ. 6FT 1/16in SUSPENSION CANOPY COMPLETE KIT FOR BOTH SIDES WITH KEYHOLE END CONNECTORS
SCL-GS10 = ADJ. 10FT 1/16IN DOUBLE SUSPENSION CABLE WITH SINGLE KEYHOLE CONN., LOOP GRIPPER ON TOP
SCL-GS20 = ADJ. 20FT 1/16IN DOUBLE SUSPENSION CABLE WITH SINGLE KEYHOLE CONN., LOOP GRIPPER ON TOP
SCL-6FT-SJTW18/5 = 6ft White Cord, SJTW 18 AWG 5-Conductor (Black, White, Green + Purple & Gray for 0-10V Dimming)
SCL-6FT-SJTW18/5-100FT = 100ft Roll of White Cord, SJTW 18 AWG 5-Conductor (Black, White, Green + Purple & Gray for 0-10V Dimming)
SCL-6FT-SJTW18/5-100FT-BK = 100ft Roll of Black Cord, SJTW 18 AWG 5-Conductor (Black, White, Green + Purple & Gray for 0-10V Dimming)
SCL-6FT-SJTW18/6-100FT = 100ft Roll of Black Cord, SJTW 18 AWG 6-Conductor (Black, White, Green + Purple & Gray for 0-10V Dimming + Red for Backup Invertor)
SCL-AH = Heavy-Duty Auxiliary Hook for Up To 1/16" Aircraft Cable
SCL-ASC-500FT = 1/16" 500 ft. Steel Aircraft Cable Suspension

Factory-Installed Options:

Blank = No Option For Accessories
OPT-HBC-125BS-WH = 10FT, 15A, 125V, 18/3 STR, WHT

SUSPENDED MOUNTING ACCESSORIES (NOT INCLUDED)

SCL-CS1-6FT SCL-CS1P-6FT SCL-CS1P-6FT-NC SCL-GS10 SCL-GS20

SCL-6FT-SJTW18/5-100FT
SCL-6FT-SJTW18/6-100FT

SCL-6FT-SJTW18/5-100FT-BK

SCL-ASC-500FT

SCL-CSK-6FT

SCL-AH

SCL-ASC-500FT

SCL-6FT-SJTW18/5

FACTORY-INSTALLED OPTIONS:

OPT-HBC-125BS-WH

Phone: (877) 805-2252 | Fax: (877) 805-2252
www.westgatemfg.com

MOUNTING AND MODULES OPTIONS:

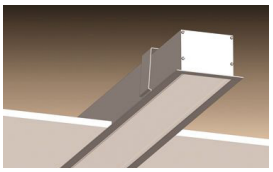

Recessed Mounted
(Flanged)

Surface Mounted

Wall Mounted

Suspended

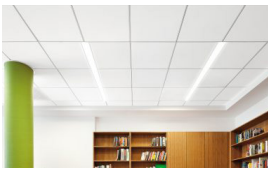

T-Bar Installation

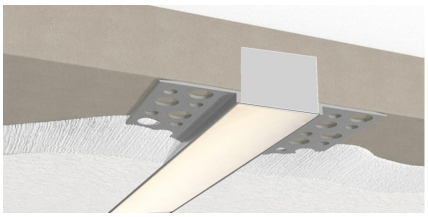

Flangless Recessed Mounted
(Mud-In)

Louver Kit Option

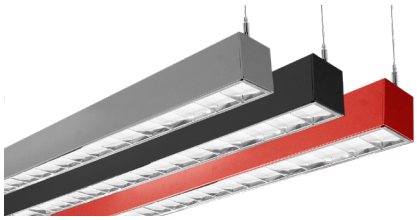

Color of Your Choice

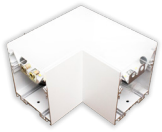

L Module
(page 7)

SCX-L-MCT4

T Module
(page 7)

SCX-T-MCT4

X Module
(page 7)

SCX-X-MCT4

Inside Corner Module
(page 7)

SCX-IC-MCT4

120º Corner Module
(page 8)

SCX-C120-MCT4

Y Module
(page 8)

SCX-Y-MCT4

L1FT Corner Module
(page 8)

SCX-L1FT-MCT4

6in Module
(page 9)

SCX-6IN-MCT4

9in Module
(page 9)

SCX-9IN-MCT4

Phone: (877) 805-2252 | Fax: (877) 805-2252
www.westgatemfg.com

MOUNTING OPTIONS:

FLANGLESS RECESSED INSTALLATION IN WOOD CEILING

No additional accessories required.
Make recessed preparations by installing a horizontal plank of wood on top of the wood ceiling at a recessed height of 3 3/8”.
Screw and anchor kit provided with each fixture can be used to fasten the top of the fixture to the wood plank through the holes on top of the fixture.
You can also install vertical wood boards on top of the ceiling at the edge of the opening and open the fixture and put screws through the side of the fixture housing to fasten it to the wood boards.

SUSPENSION ROD KITS (SET OF 2)

Model	SIZE
SCL-RS-12	12 IN
SCL-RS-18	18 IN
SCL-RS-24	24 IN
SCL-RS-36	36 IN
SCL-RS-48	48 IN

WALL MOUNTING

Model	DESCRIPTION
OPT-SCX-WM-1FT	Install this optional wall mounting brackets on the back of the fixture. Connection cables will enter the fixture through one of these wall-mounting brackets. On your purchase order, please specify the position of where your wire entry from the wall.

WALL MOUNTING

Model	DESCRIPTION
OPT-SCX-WMA-1FT	Add this option to the fixture, and wall mounting arms with a wall canopy will be installed on the back of the fixture. The length of each arm is 5”. Connection cables will enter the fixture through one of the arms. On your purchase order, specify the position of your wire entry from the wall, and the arm will be installed on the back accordingly.

RECESSED MOUNT WITH FLANGE

Model	DESCRIPTION
OPT-SCX-FMR-1FT	Order this option and the fixture will be equipped with a 1/2” wide flange on four sides. Advanced design toggle-style brackets will also be provided, to adjust and hold the fixture against drywall or other hard ceilings from the top. When linking to another fixture or corner module, call us or send a copy of your plan along with your PO, and flanges will be removed on those ends that need to make a seamless connection.

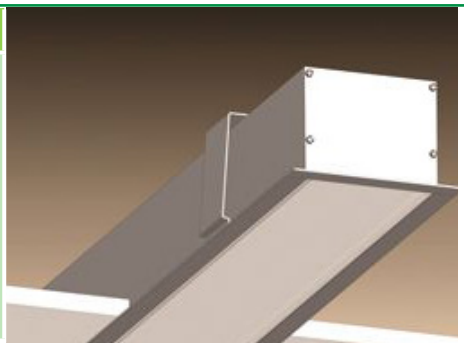

LINKING

Model	DESCRIPTION
OPT-SCX-LINKWIRING	Fixtures are equipped with pre-installed linking brackets and accessories and only need to be wired together. to receive a fixture prewired for linking, order the option below for each link to another fixture or a corner module.

FLANGELESS RECESS MOUNT IN DRYWALL (MUD-IN)

Model	DESCRIPTION
OPT-SCX-MIF-1FT	Order this option and the fixture will be equipped with mud-in brackets on all four sides, mounted at 1/16” from the lens surface (specify if other spacing is needed). Advanced design toggle-style brackets will also be provided, to adjust and hold the fixture against the drywall ceiling from the top. When linking to another fixture or corner fixture module call us or send a copy of your plan along with your PO and flanges will be removed on those end that needs to make a seamless connection.
OPT-SCX-MIF-L	This is a L Module option.
OPT-SCX-MIF-T	This is a T Module option.
OPT-SCX-MIF-X	This is a X Module option.
OPT-SCX-MIF-IC	This is a Inside Corner Module option.

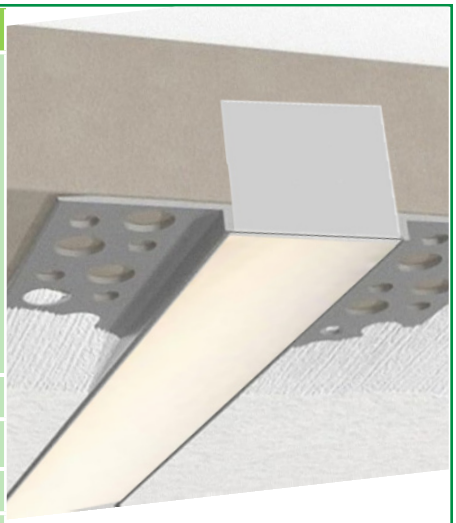

T-BAR INSTALLATION

Model	DESCRIPTION
OPT-SCX-TBAR-1FT	Add this option and 1/2” wide flanges will be installed on the two long sides of the fixture. The two ends of the fixture will fall onto the T-bar grids and will be supported this way. The T-bar tiles on the two sides of the fixture must be cut to allow for the width of the fixture. The tile will fall onto and be supported by the flanges on both sides of the fixture. If you plan to support the fixture by the grids on three sides and tile on one side, call us or specify on your PO, and flange will be installed only on one side of the fixture. To provide safety and support from the beams above the T-bar ceiling order 10ft or 20ft aircraft suspension kits below.
SCL-GS10	Adjustable 1/16” 10ft suspension kit with loop gripper & toggle ends hold up to 70 lbs load.
SCL-GS20	Adjustable 1/16” 20ft suspension kit with loop gripper & toggle ends hold up to 70 lbs load.
OPT-FWH-63 OPT-FWH-65 OPT-FWH-66	This is a 6FT 3-Wire Whip option. This is a 6FT 5-Wire Whip option. This is a 6FT 6-Wire Whip option.

SURFACE MOUNTING

No additional accessories required.
Screw and anchor kit provided with each fixture can be used to fasten the fixture directly to the hard surface through the holes on top of the fixture.

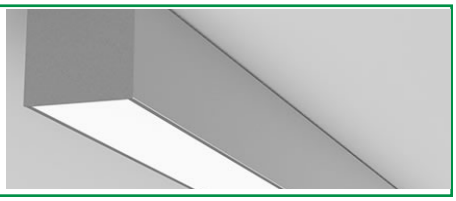

FACTORY-INSTALLED OPTIONS:

LOUVER VERSION

Model	DESCRIPTION	LUMENS @ 4000K	SIZE
OPT-SCX-LUV-1FT	This Louver option includes lens inside.	2160LM	1FT

COLOR OF YOUR CHOICE

Model	DESCRIPTION
OPT-SCX-CLR-1FT	Add this option and specify your desired color on your purchase order or provide a swatch to match. For painted flanged fixture or optional rod, mounting set please also add the relevant option below for each fixture.
OPT-SCX-CLR-FRM	This is a painted flanges option.
OPT-SCX-CLR-RODSET	This is a painted rod set option.

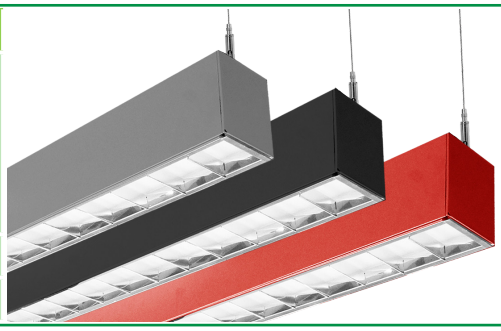

INDIRECT (UP) LIGHTING

Model	WATTS	LUMENS	COLOR TEMP	SIZE
OPT-SCX-ULM-1FT-8W-MCT4	8W	800LM 824LM 840LM 864LM	3000K 3500K 4000K 5000K	1FT
OPT-SCX-ULM-BU	Indirect (up) light with blue color			
OPT-SCX-ULM-GR	Indirect (up) light with green color			

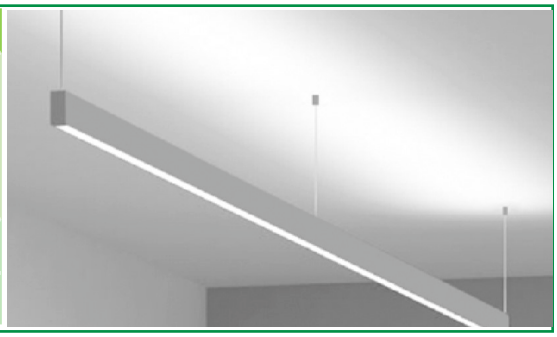

EMERGENCY BATTERY BACKUP

Model	DESCRIPTION
OPT-EM-CM1INT	This is an option for a 90-minute backup battery installation. If you need to order this series for the fixture, please have your purchase order ready and call us or specify on the order which fixture to install this option and the test button.

BI-LEVEL MOTION SENSOR

Model	DESCRIPTION
OPT-SCX-SEN2US	This option installs an advanced motion sensor that will turn the lights on when the area is occupied. When the area is cleared, after a preset hold time of 5 sec or more the lights are dimmed to a standby level of 30% or more. If still no motion is detected, after the standby period, the light is turned off. All setting is programmable with a remote control.
OPT-WEC-3RC	This is an optional remote control for sensor.
OPT-SEN-SCX-2MRLV-5	This is a programmable microwave Bi-Level sensor.
OPT-SEN-2US-DAYLIGHT	It is an ultrasonic Bi-Level Dimming Daylight sensor option for internal installation inside the fixture. (Remote not needed)

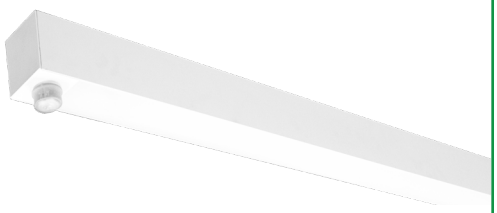

LIGHTS SCX FLEXIBLE LENS ROLL 25FT OR 100FT

Model	SIZE	DESCRIPTION
SCX-FLEXLENS-25FT	25FT	Flex lenses can be cut to different lengths, enabling precise customization according to the installation area. This allows for a seamless fit, reducing gaps or visible transitions between different sections of the SCX lights
SCX-FLEXLENS-100FT	100FT	

DEDICATED WIRING FOR UPLIGHT CONTROL

Model	DESCRIPTION			
OPT-SCX-ULC-1FT-8W-MCT4	Dedicated Wiring For Uplight Control By Installing A Separate Electrical Circuit And Compatible Driver For Uplighting. This Ensures Independent Control And Power Management. A Driver Regulates The Voltage And Current Supplied To The Uplights, Allowing For Precise Brightness And Color Control, Often Through A Dimmer Or automation System.			
	WATTS	LUMENS	COLOR TEMP	SIZE
	8W	800LM 824LM 840LM 864LM	3000K 3500K 4000K 5000K	1FT

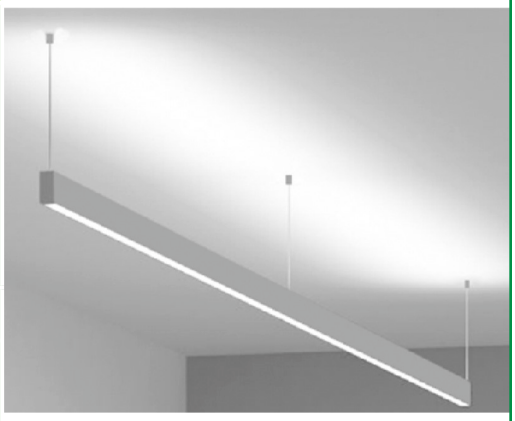

T-BAR INSTALLATION

Model		DESCRIPTION
OPT-SCX-TBAR-1FT	1FT	Add this option to the fixture, and 1/2” wide flanges will be installed on the two long sides ofthe fixture. The two fixture ends will fall onto the t-bar grids and will be supported this way. The t-bar tiles on the two sides of the fixture must be cut to allow for the fixture’s width. The tiles will fall onto and be supported by the flanges on both sizes of the fixture. If you plan to support the fixture by the grids on three sides and tile on one side, call us or specify on your po, and the flange will be installed only on one side of the fixture. To provide safety and support from the beams above the t-bar ceiling, order 10ft or 20ft aircraft suspension kits below.

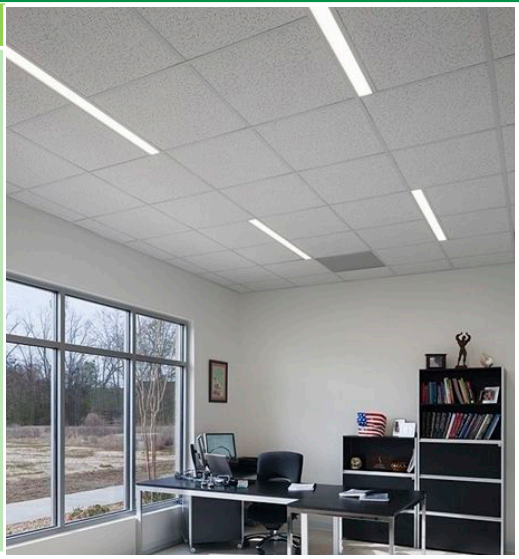

WALL GRAZER KIT OPTIONS

Model	DESCRIPTION
OPT-SCX-WGRZR-1FT	Wall Grazer Kit, Zinc materials, The installation depth can be maximum 4inch

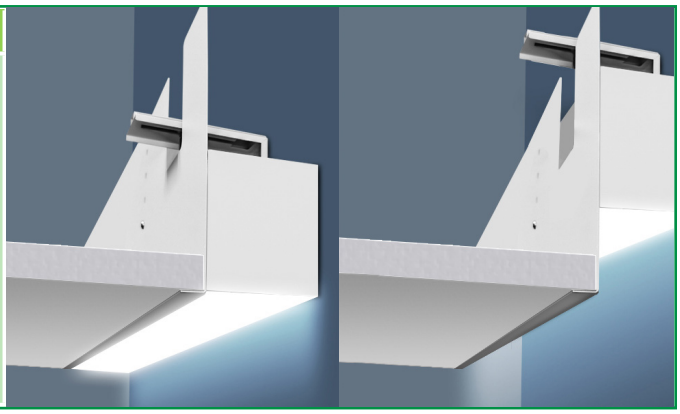

CORNER FIXTURE MODULES:

Built-in LED Modules

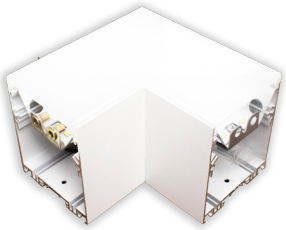

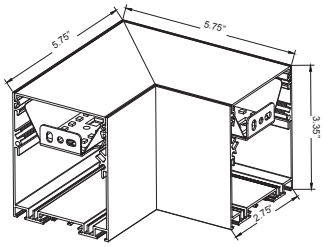

Model	JOINT TYPE	LUMENS	MCT4	DIMENSION
SCX-L-MCT4	L	508LM 575LM 616LM 660LM	3000K 3500K 4000K 5000K	5.75” X 5.75”X 3.35” X 2.75”

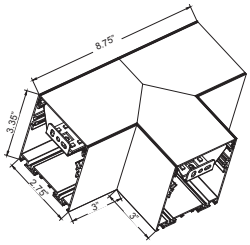

Model	JOINT TYPE	LUMENS	COLOR TEMP	DIMENSION
SCX-T-MCT4	T	629LM 726LM 787LM 854LM	3000K 3500K 4000K 5000K	8.75” X 3” X 3” X 3.35” X 2.75”

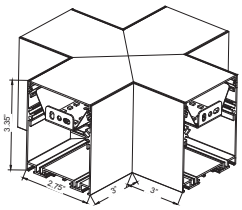

Model	JOINT TYPE	LUMENS	COLOR TEMP	DIMENSION
SCX-X-MCT4	X	733LM 863LM 944LM 1037LM	3000K 3500K 4000K 5000K	3” X 3” X 3.35” X 2.75”

Phone: (877) 805-2252 | Fax: (877) 805-2252
www.westgatemfg.com

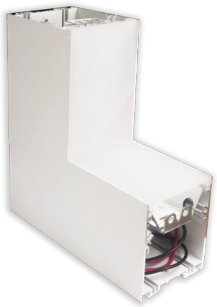

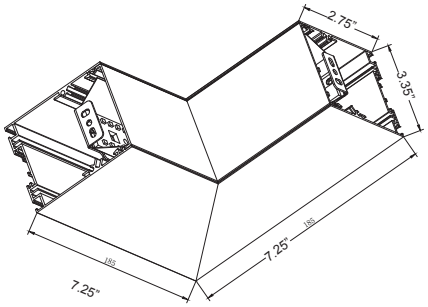

Model	JOINT TYPE	LUMENS	COLOR TEMP	DIMENSION
SCX-IC-MCT4	INSIDE CORNER	629LM 726LM 787LM 854LM	3000K 3500K 4000K 5000K	7.25” X 7.25” X 3.35” X 2.75”

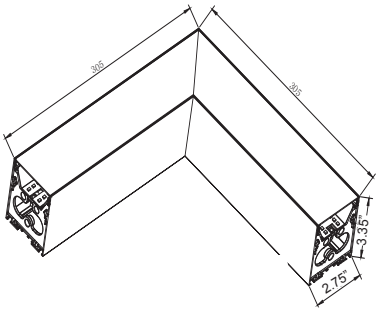

Model	JOINT TYPE	LUMENS	COLOR TEMP	DIMENSION
SCX-L1FT-MCT4	L FIXTURE	2197LM 2316LM 2348LM 2390LM	3000K 3500K 4000K 5000K	12” X 12” X 3.35” X 2.75”

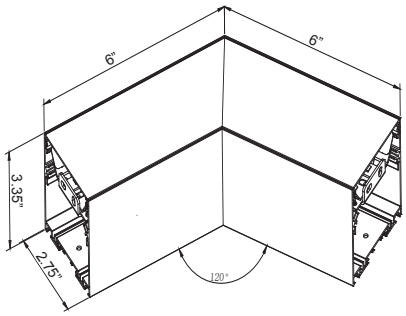

Model	JOINT TYPE	LUMENS	COLOR TEMP	DIMENSION
SCX-C120-MCT4	120° CORNER	508LM 575LM 616LM 660LM	3000K 3500K 4000K 5000K	6” X 6” X 3.35” X 2.75”

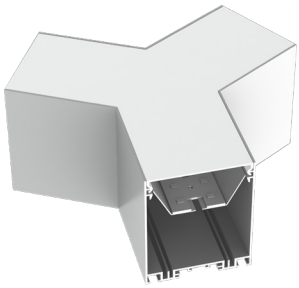

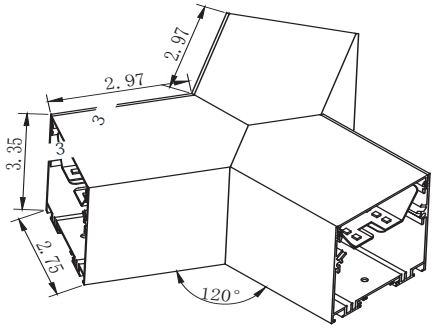

Model	JOINT TYPE	LUMENS	COLOR TEMP	DIMENSION
SCX-Y-MCT4	Y	508LM 575LM 616LM 660LM	3000K 3500K 4000K 5000K	3” X 3” X 3.35” X 2.75”

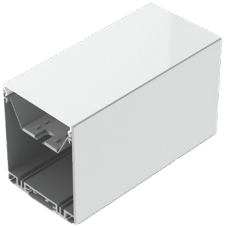

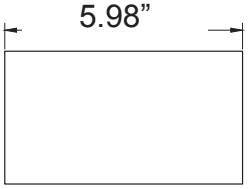

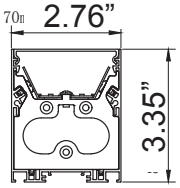

Model	JOINT TYPE	LUMENS	COLOR TEMP	DIMENSION
SCX-6IN-MCT4	6in Module	508LM 575LM 616LM 660LM	3000K 3500K 4000K 5000K	5.98” X 2.76” X 3.35”

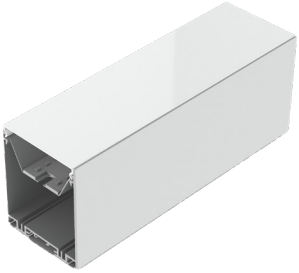

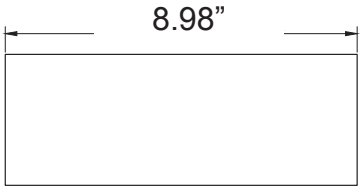

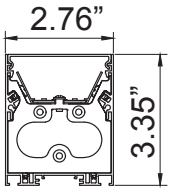

Model	JOINT TYPE	LUMENS	COLOR TEMP	DIMENSION
SCX-9IN-MCT4	9in Module	508LM 575LM 616LM 660LM	3000K 3500K 4000K 5000K	8.98” X 2.76” X 3.35”

Phone: (877) 805-2252 | Fax: (877) 805-2252
www.westgatemfg.com

COLOR CHART: * Choose from one of our Premium Colors with no set-up fee.

Gloss:

SILVER METALLIC 70 GLOSS T357-GR105

SILVER METALLIC 30 GLOSS T353-GR06

DARK RED 90 GLOSS P009-RD02

INTERNATIONAL ORANGE 90 GLOSS T009-OG26

SAFETY ORANGE 90 GLOSS T009-OG01

YELLOW 90 GLOSS T009-YL14

YELLOW 90 GLOSS T009-YL01

TRAFFIC GREEN 70 GLOSS T007-GN16

GREEN 70 GLOSS T007-GN13

GREEN 60 GLOSS C006-GN03

BLUE 90 GLOSS T009-BL01

DARK BLUE 80 GLOSS T008-BL20

RAL 8028 TERRA BROWN 90 GLOSS C209-BR358

Hammer:

WHITE HAMMER T013-WH09

BEIGE HAMMER T013-BG38

GREY HAMMER C013-GR08

SILVER HAMMERTONE T064-GR05

BLACK HAMMER T013-BK62

RED HAMMER T013-RD15

GREEN HAMMER T013-GN220

BLUE HAMMER T013-BL468

BRONZE HAMMER T012-BR161

Texture:

WHITE TEXTURE C031-WH120

FLINT GRAY TEXTURE T243-GR522

BLACK TEXTURE C241-BK109

RED TEXTURE T241-RD129

BLUE TEXTURE C241-BL544

OIL RUBBED BRONZE TEXTURE T291-BR251

Vein:

BLACK/WHITE VEIN T075-WH34

SILVER VEIN T375-BK26

COPPER VEIN EXTERIOR T075-BK211

GOLD VEIN T375-BK10

COPPER VEIN T375-BK07

Phone: (877) 805-2252 | Fax: (877) 805-2252
www.westgatemfg.com