SCSSL SERIES

SCSSL-UD-8FT-MCTP
SCSSL-UD-8FT-MCTP-BK

ARCHITECTURAL 0.4” SLIM UP&DOWN /W SEPARATE CONTROLS LINEAR LIGHT
MCTP Multi Color Temperature & Multi Power/Wattage (Selectable)

WESTGATE
THE FUTURE IS HERE...AND IT’S QUITE BRIGHT!

Customer Name:
Project Name:
Note: | Type:

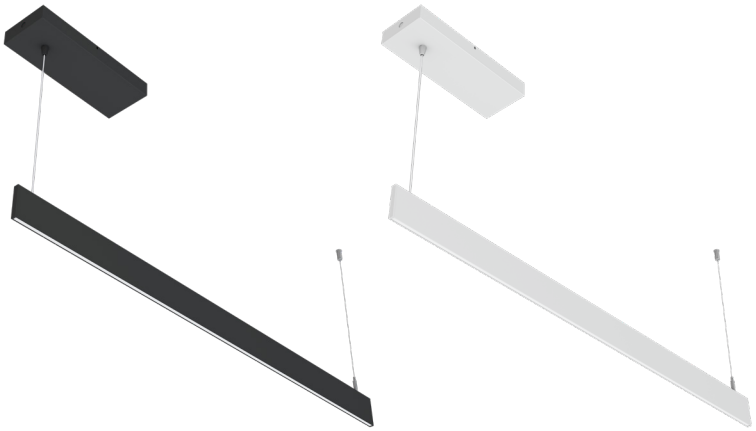

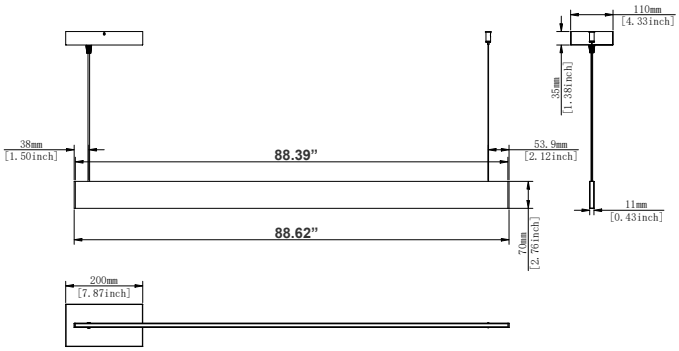

Avail Finish:

A modern decorative Euro-design suspended light suitable for conference tables, creative offices and department stores.

Canopy Dimension: 88.39”(W) x 1.38”(H) x 4.33”(D)
Fixture Dimension: 88.62”(W) x 2.79”(H) x 7.87”(D)

Features

- LED Superior Architectural Lights
- Flat Frosted PC Lens
- Aluminum Housing With Sandy White and Black Finish
- MCTP: Multi Color Temperature and Power (Selectable, the switches are inside the Canopy)
- 5-Year Warranty

Technical Specifications

Electrical:

- Voltage: 120-277V AC 50/60Hz
- Wattage: 20W/30W/40W
- Power Factor: >0.9
- LPW: 70LM/W
- Total Harmonic Distortion: ≤19 %

Mechanical:

- Aluminum Housing With Sandy Black and White Finish
- Two 10FT Adjustable Suspension Cables with Canopies Included
- Lens: Optic Lens
- Operating Temperature: -22°F to +104°F
- IP Rating: IP20, Suitable for damp location
- 5-Year Warranty

Lighting:

- Dimming: (Dual Function) Triac Dimmable at 120V & 0-10V Dimming at 120-277V
- Total Lumens: 2800LM Max.
- Color Temperatures: 2700K/3000K/3500K/4000K/5000K
- MCTP: Multi Color Temperature and Power (Selectable, the switches are inside the Canopy)
- Color Rendering Index: CRI ≥ 80
- 50,000 Hours Rated Life
- Beam Angle: 120°

Applications:

- Ideal for offices, hotels, corridors, saloons, libraries, meeting rooms, conference halls, and the best solution for modern lighting solutions
- It can be used in any indoor applications

Phone: (877) 805-2252 | Fax: (877) 805-2252
www.westgatemfg.com

WG-04102022

Photometrics: SCSSL-UD-8FT-MCTP

BUG rating

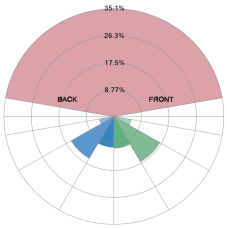

Rating: B1 U4 G1		
Forward Light		
Low (0-30°)	207	10.3%
Medium (30-60°)	340.7	16.9%
High (60-80°)	112.6	5.60%
Very High (80-90°)	14.68	0.730%
Back Light		
Low (0-30°)	201.1	10.0%
Medium (30-60°)	315.7	15.7%
High (60-80°)	93.42	4.65%
Very High (80-90°)	7.952	0.396%
Uplight		
Low (90-100°)	11.94	0.594%
High (100-180°)	705.1	35.1%
Total		
Sum	2010	100%

IESNA TM-15-07 Luminaire Classification System For Outdoor Luminaires

BUD Rating: B1-U4-G1

Iso-illuminance plot

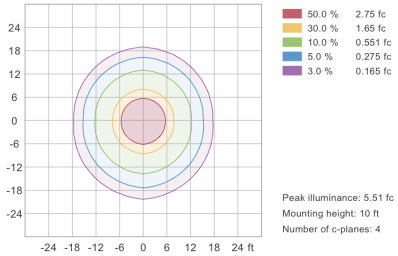

Area 24'x 28' Mounting Height: 9'

Performance Table: SCSL-UD-8FT-MCTP

MODEL NO.	Wattage	Voltage	Lumens	Color Temp.	BUG Rating	LPW
SCSSL-UD-8FT-MCTPS SCSSL-UD-8FT-MCTP-BK	20W 30W 40W	120~277V	1400 2100 2800	2700K 3000K 3500K 4000K 5000K	B1-U4-G1	70

Sample Ordering

Model	Direction	Size	Color Temp.	Finish
SCSSL	UD	8FT	MCTP	

BK = Black
WH = White

Accessories:

Blank = No Option For Accessories
SCSSL-REC = SCSSL Rounded End Cap
SCSSL-REC-BK = SCSSL Rounded End Cap. Black
SCSSL-CEC = SCSSL Coupling End Cap
SCSSL-CEC-BK = SCSSL Coupling End Cap

Factory-Installed Options:

Blank = No Option For Accessories
OPT-EM-SCSL-WH = Factory-Installed EM option, Installed in Deeper Canopy, White
OPT-EM-SCSL-BK = Factory-Installed EM option, Installed in Deeper Canopy, Black

ACCESSORIES:

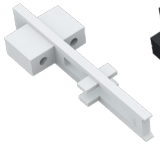

SCSSL-CEC

SCSSL-CEC-BK

SCSSL-REC

SCSSL-REC-BK

SCSL
PC Lens
shown with Round Endcap

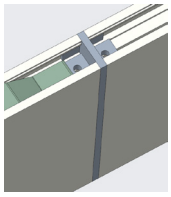

SCSL-CEC

FACTORY-INSTALLED OPTIONS:

OPT-EM-SCSL-WH
OPT-EM-SCSL-BK

SCSSL-UD-8FT-MCTP
SCSSL-REC

SCSSL-UD-8FT-MCTP-BK
SCSSL-REC-BK

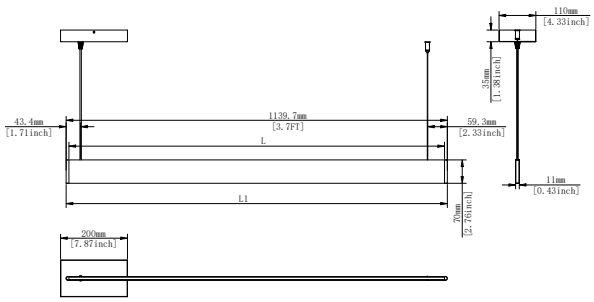

SCSSL-UD-8FT-MCTP
SCSSL-REC
3.7"(W) x 2.76"(H) x 4.33"(D)

Phone: (877) 805-2252 | Fax: (877) 805-2252
www.westgatemfg.com