SCL SERIES

SCL-GSY120

WESTGATE
THE FUTURE IS HERE...AND IT'S QUITE BRIGHT!

Customer Name:

Project Name:

Note: | Type:



ADJ. 20FT 1/16IN SINGLE SUSPENSION CABLE WITH Y HOOK ENDS, LOOP GRIPPER ON TOP (ORDER 3 FOR 8FT.)(1)

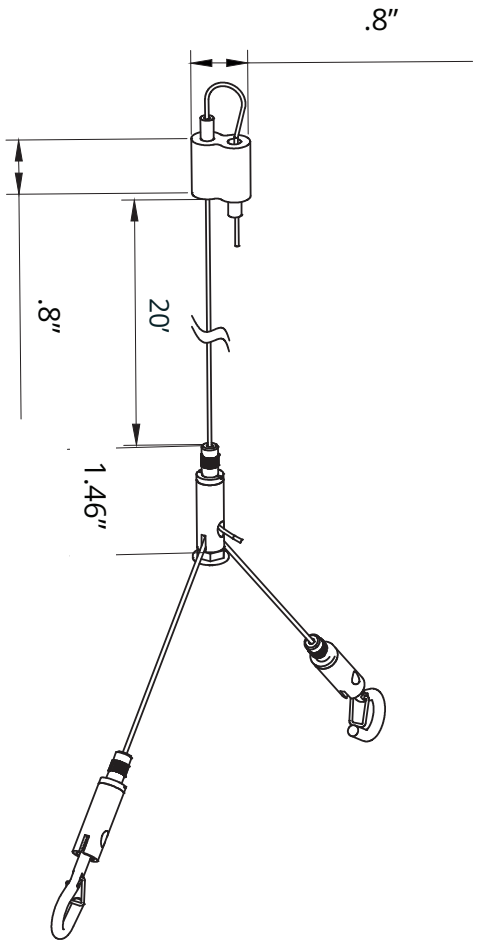

Mechanical:

- Adjustable Steel Aircraft Cable, 20FT Long Max.
- 1/16” Dia. Aircraft Cable
- Zinc-Plated Steel Connectors
- Steel Loop Gripper on Top
- Max Load: 70 Lbs.

Phone: (877) 805-2252 | Fax: (877) 805-2252
www.westgatemfg.com

Related Models:



SCL-GSY110

Accessories & Replacement Parts:



SCL-6FT-SJTW18/5
WHITE 6 FT. CORD, SJTW 18 AWG
5-CONDUCT (WH/BK/GN/PU/GY)



SCL-6FT-SJTW18/6
WHITE 6 FT. CORD, SJTW 18 AWG
6-CONDUCT (WH/BK/GN/PU/GY + RED FOR EMERGENCY))



SCL-12FT-SJTW18/5
WHITE 12 FT. CORD, SJTW 18 AWG
5-CONDUCT (WH/BK/GN/PU/GY)



SCL-12FT-SJTW18/6
WHITE 12 FT. CORD, SJTW 18 AWG
6-CONDUCT (WH/BK/GN/PU/GY + RED FOR EMERGENCY)



SCL-100FT-SJTW18/5
WHITE 100 FT. CORD, SJTW 18 AWG
5-CONDUCT (WH/BK/GN/PU/GY)



SCL-100FT-SJTW18/6
WHITE 100 FT. CORD, SJTW 18 AWG
6-CONDUCT (WH/BK/GN/PU/GY + RED FOR EMERGENCY)



SCL-100FT-SJTW18/5-BK
WHITE 100 FT. CORD, SJTW 18 AWG
5-CONDUCT (WH/BK/GN/PU/GY)



SCL-100FT-SJTW18/6-BK
WHITE 100 FT. CORD, SJTW 18 AWG
6-CONDUCT (WH/BK/GN/PU/GY + RED FOR EMERGENCY)



SCL-6FT-SJTW18/5-BK
WHITE 6 FT. CORD, SJTW 18 AWG
5-CONDUCT (WH/BK/GN/PU/GY)



SCL-6FT-SJTW18/6-BK
WHITE 6 FT. CORD, SJTW 18 AWG
6-CONDUCT (WH/BK/GN/PU/GY + RED FOR EMERGENCY))



SCL-12FT-SJTW18/5-BK
WHITE 12 FT. CORD, SJTW 18 AWG
5-CONDUCT (WH/BK/GN/PU/GY)



SCL-12FT-SJTW18/6-BK
WHITE 12 FT. CORD, SJTW 18 AWG
6-CONDUCT (WH/BK/GN/PU/GY + RED FOR EMERGENCY)



SCL-ASC-500FT
1/16” 500 FT. STEEL AIRCRAFT SUSPENSION
CABLE



SCL-ASC-1000FT
1/16” 1000 FT. STEEL AIRCRAFT SUSPENSION CABLE



SCL-ASC-50FT
1/16IN 50FT ROLL STEEL AIRCRAFT SUSPENSION CABLE



SCL-ASC-100FT
1/16IN 100FT ROLL STEEL AIRCRAFT SUSPENSION CABLE



SCL-ALG
AUXILIARY LOOP GRIP FOR AIRCRAFT
SUSPENSION CABLE, 1/16”



SCL-AH
HEAVY-DUTY AUXILIARY HOOK FOR UP TO 1/16” AIRCRAFT CABLES