SCL SERIES

SCL-CSY1-6FT

WESTGATE
THE FUTURE IS HERE...AND IT'S QUITE BRIGHT!

Customer Name:

Project Name:

Note: | Type:

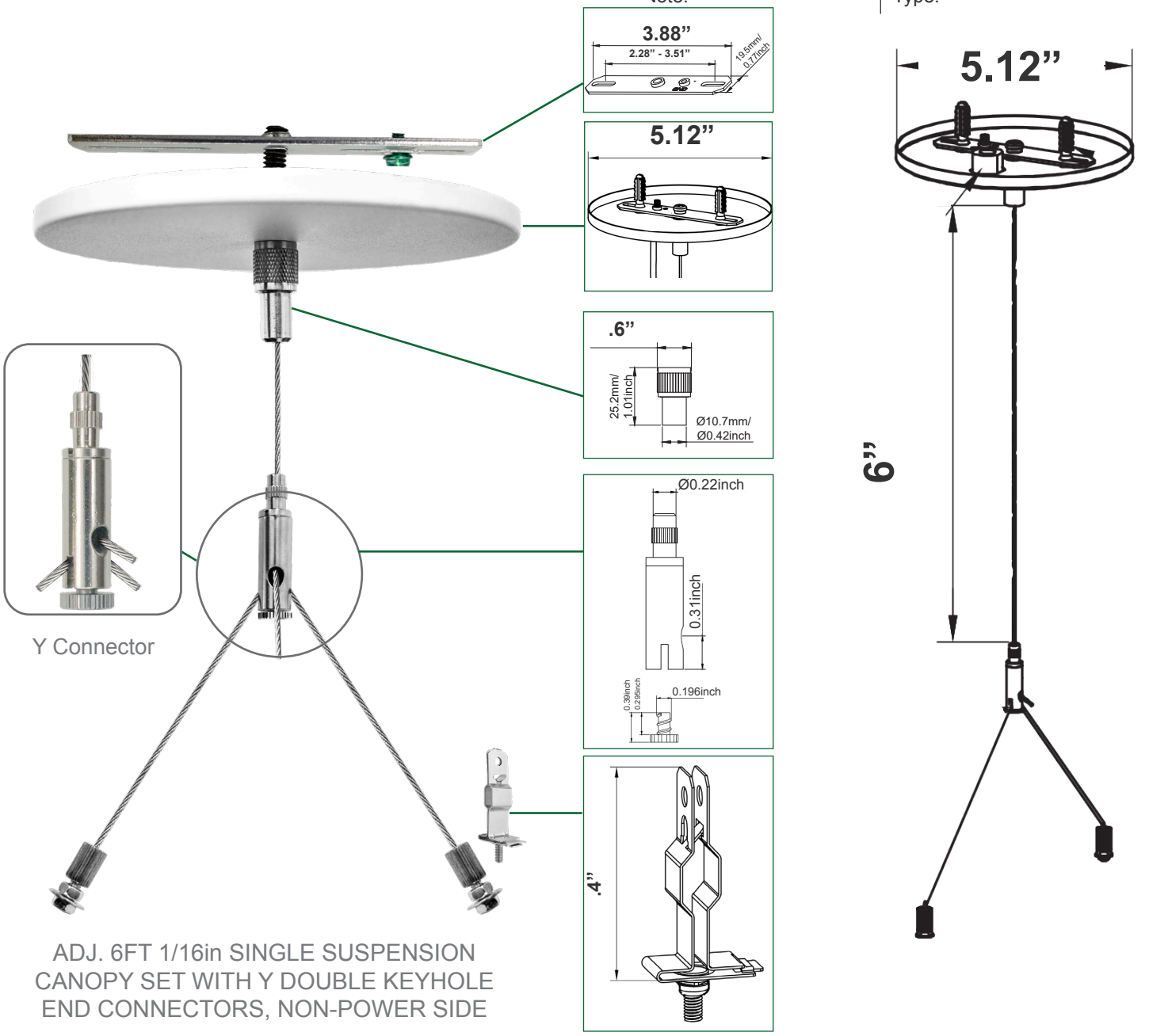

ADJ. 6FT 1/16in SINGLE SUSPENSION CANOPY SET WITH Y DOUBLE KEYHOLE END CONNECTORS, NON-POWER SIDE

Mechanical:

- Adjustable Steel Aircraft Cable, 6FT Long Max.
- 1/16 Dia. Aircraft Cable
- Zinc-Plated Steel Connectors
- Steel Canopy, White Powder Coated
- Max Load: 70 Lbs.
- Fits on a Standard 3” or 4” Junction Boxes.
- Fits on T-Bar Ceilings
- Steel T-bar Clip Included

WESTGATE

Phone: (877) 805-2252 | Fax: (877) 805-2252
www.westgatemfg.com

Related Models:

SCL-CSY1P-6FT-NC

SCL-CSY1P-6FT

Accessories & Replacement Parts:

SCL-6FT-SJTW18/5
WHITE 6 FT. CORD, SJTW 18 AWG 5-CONDUCT (WH/BK/GN/PU/GY)

SCL-6FT-SJTW18/6
WHITE 6 FT. CORD, SJTW 18 AWG 6-CONDUCT (WH/BK/GN/PU/GY + RED FOR EMERGENCY))

SCL-12FT-SJTW18/5
WHITE 12 FT. CORD, SJTW 18 AWG 5-CONDUCT (WH/BK/GN/PU/GY)

SCL-12FT-SJTW18/6
WHITE 12 FT. CORD, SJTW 18 AWG 6-CONDUCT (WH/BK/GN/PU/GY + RED FOR EMERGENCY)

SCL-100FT-SJTW18/5
WHITE 100 FT. CORD, SJTW 18 AWG 5-CONDUCT (WH/BK/GN/PU/GY)

SCL-100FT-SJTW18/6
WHITE 100 FT. CORD, SJTW 18 AWG 6-CONDUCT (WH/BK/GN/PU/GY + RED FOR EMERGENCY)

SCL-ASC-50FT
1/16IN 50FT ROLL STEEL AIRCRAFT SUSPENSION CABLE

SCL-ASC-100FT
1/16IN 100FT ROLL STEEL AIRCRAFT SUSPENSION CABLE

SCL-ASC-500FT
1/16" 500 FT. STEEL AIRCRAFT SUSPENSION CABLE

SCL-ASC-1000FT
1/16" 1000 FT. STEEL AIRCRAFT SUSPENSION CABLE

SCL-CTB
CANOPY SET TOP BRACKET FOR MOUNTING ON JUNCTION BOX OR CEILING

SCL-ABC
AUXILIARY BLANK CANOPY FOR SUSPENSION CABLES

SCL-AYC
AUXILIARY Y CONNECTOR FOR AIRCRAFT SUSPENSION CABLE, 1/16"

SCL-TBC-WN
T-BAR CLIP WITH SUSPENSION HOLE ON TOP, WING NUT AND WASHER INCL.

SCL-TG1420
AUXILIARY TOP GRIPPER SIDE EXIT WITH 1/4-20 THREAD FOR 1/16IN AIRCRAFT CABLE

SCL-YCK
ADJ. 1/16in Y CONVERSION SUSPENSION CABLE WITH TOGGLE ENDS

SCL-AKHC
AUXILIARY KEYHOLE CONNECTOR FOR AIRCRAFT SUSPENSION CABLE, 1/16"

Phone: (877) 805-2252 | Fax: (877) 805-2252
www.westgatemfg.com