LW360 SERIES MCTP

ARCHITECTURAL OUTDOOR LIGHTING

LW360-15-40W-MCTP-PSR
LW360-15-40W-MCTP-PSR-WH
LW360-15-40W-MCTP-PSR-SIL
LW360-15-40W-MCTP-PSR-BK

LED 360° ROTATABLE WALL PACK, PHOTOCELL, SENSOR-READY


Bronze


White


Black


Silver

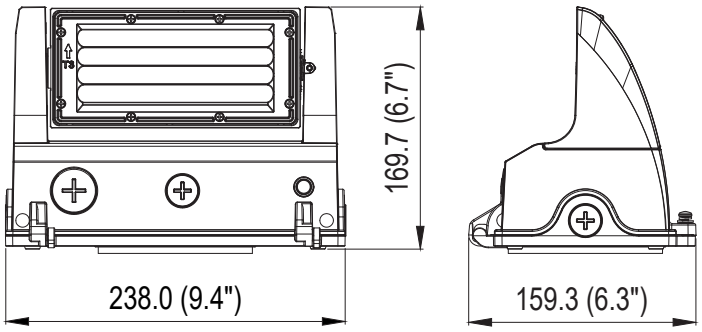

Technical Drawing: 6.3" (D) x 9.4" (W) x 6.7" (H)

– The LW360-15-40W-MCTP-PSR Series is a compact, adjustable LED wall pack designed for commercial exterior wall-mounted lighting applications. The single-lens fixture combines four selectable wattages, 30K/40K/50K selectable CCT and integrated dusk-to-dawn photocell control in one versatile platform. Its adjustable lighting head allows the beam to be aimed for walkways, building perimeters, parking areas and security lighting, while the die-cast aluminum housing, IP65 construction and wet-location rating provide durable outdoor performance. Compatible sensor accessories and an emergency-backup option are available for expanded control flexibility.

Customer Name:

Project Name:

Note: | Type:

FEATURES:
– IP65 wet-location construction
– Polycarbonate lens ,High-output Polycarbonate lens
– Adjustable light distribution
– Pre-installed dusk-to-dawn photocell with ON/OFF control
– Sensor-ready design
– Sensor sold separately
– 7-year warranty

SPECIFICATIONS:

ELECTRICAL:
– 120-277VAC, 50/60 Hz
– Selectable wattage: 15W / 25W / 30W / 40W
– 0-10V dimming
– Power factor: ≥0.90
– THD: <20%
– Integrated dusk-to-dawn photocell with ON/OFF selector
– Factory default setting: photocell ON, maximum wattage and 5000K
– Operating temperature: -40°F to 122°F
– Operating temperature with emergency backup: 32°F to 104°F
– Surge protection: 6kV line-to-neutral / 6kV line-to-ground
– Class 2 auxiliary output for compatible sensor controls

MECHANICAL:
– Die-cast aluminum housing
– Polycarbonate lens
– Single-lens design
– IP65 rated
– Suitable for wet locations
– Wall mount only
– Toolless adjustable lighting head
– Adjustable head range: -15° to 210°
– Four 1/2" knockouts for installation
– Silicone-gasketed housing construction
– Bottom drain openings for moisture management
– Fixture dimensions: 9.4"W x 6.7"H x 6.3"D
– Fixture weight: 3.64 lb
– Available finishes: Bronze, Black, Silver and White

LIGHTING:
– 3CCT selectable: 3000K / 4000K / 5000K
– Up to 6,000 lumens at 40W
– Up to 150 LM/W
– 80 CRI
– Type III light distribution
– SMD2835 LED technology
– Field-selectable wattage and CCT
– Adjustable optical assembly for directional illumination
– 70,000-hour rated life

Phone/Fax: (877) 805-2252
www.westgatemfg.com

PERFORMANCE TABLE

MODEL NO.	WATTAGE	LUMEN	COLOR TEMP	LPW
LW360-15-40W-MCTP-PSR LW360-15-40W-MCTP-PSR-BK LW360-15-40W-MCTP-PSR-SIL LW360-15-40W-MCTP-PSR-WH	15W 25W 30W 40W	2250LM 3750LM 4500LM 6000LM	30K/40K/50K	150

ACCESSORIES

MODEL NO.	DESCRIPTION	IMAGE
OPT-EM-LW360	Internal emergency backup	
OPT-CLR-85(BK/GR/SR/WH)	Powder-coat finish option	
OPT-CLR-MC	Custom color, setup fee per project	
WEC-3PR-78-AJ-WH WEC-3PBT-78-AJ-WH	PIR Sensor 1-Pin Audio Jack Contact 600W 40Ft 120-277V 0-10V Bi-Level Bluetooth App Ready	

MORE VIEWS


Bronze


White


Black


Silver


Bronze


White


Black


Silver

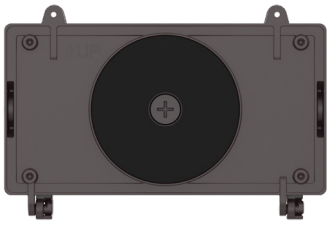
Bronze

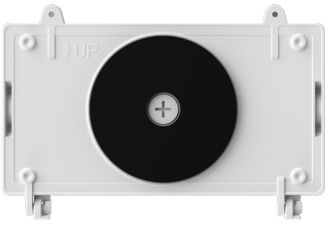
White

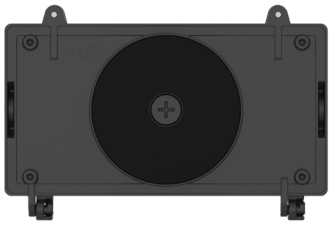
Black

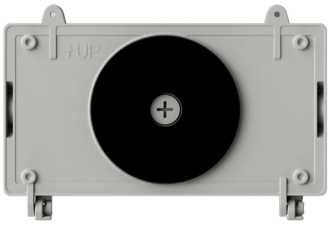
Silver