LTRE SERIES Commercial Lighting

WESTGATE
THE FUTURE IS HERE...AND IT'S QUITE BRIGHT!

LTRE-2X2-MCTP
LED TROFFERS

MCTP Multi Color Temperature & Multi Power/Wattage (Selectable)

Customer Name:

Project Name:

Note: | Type:



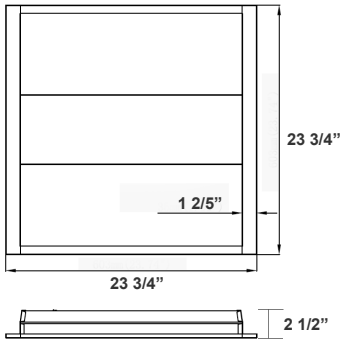

23 3/4”(L) x 23 3/4”(W) x 2 1/2”(H)

This Troffer Light is ideal for Hotels, Offices, Retail Outlets, Restaurants, Storage Rooms, Conference Rooms, Education Facilities, and more.

Features

- 5-Year Warranty
- White Finish
- Rated Life: 50,000 Hours
- Lens: Polycarbonate
- Multi CCT & Power (Selectable Switch On Back Of Fixture)

Technical Specifications

Electrical:

- Voltage: 120-277VAC 50/60Hz
- Wattage: 26W/32W/40W
- Power Factor: >0.97
- Efficacy:125 LPW

Mechanical:

- White Finish
- Cold-Rolled Steel
- Earthquake Hooks Built Into The Housing
- Operating Temperature: -4°F ~ 122°F
- 5-Year Warranty

Lighting:

- Multi CCT & Power (Selectable Switch On Back Of Fixture)
- Dimmable: 0~10V Dimming
- LED Type: SMD 2835
- Total Lumens: 3250LM/4000LM/5000LM
- Color Rendering Index: CRI ≥ 80
- Color Temperatures: 3500K/ 4000K/ 5000K
- Rated Life: 50,000 Hours

Applications:

- This LED Center Basket Troffer Light is ideal for Hotels, Offices, Retail Outlets,Restaurants, Storage

Other Models:

- 40W | 5000LM | LTRE-1X4-MCTP
- 50W | 6250LM | LTRE-2X4-MCTP

Phone: (877) 805-2252 | Fax: (877) 805-2252
www.westgatemfg.com |

WG-10272022

Photometrics: LTRE-2X2-MCTP

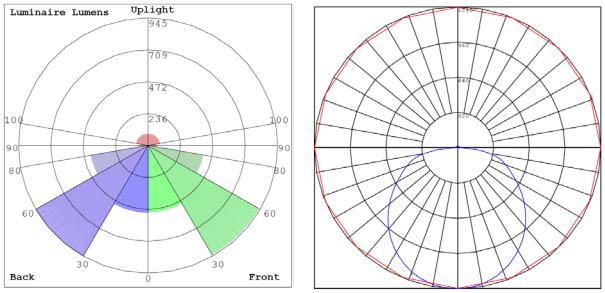

BUG Rating: B1-U3-G1

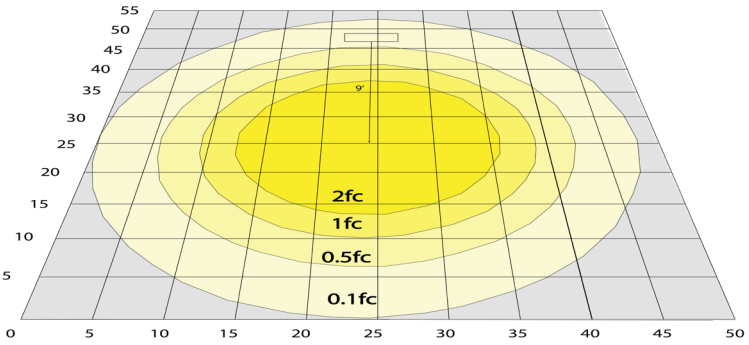

Area 55'x 50' Mounting Height: 9'

Other Views:



Side View



Front View



Back View

Performance Table: LTRE-2X2-MCTP

MODEL NO.	Wattage	Voltage	Lumens	Color Temp.	BUG Rating	LPW
LTRE-2X2-MCTP	26W 32W 40W	120~277V	3250LM 4000LM 5000LM	3500K 4000K 5000K	B1-U3-G1	125

Sample Ordering

Model	Size	Watt/Color Temp.
LTRE	2X2	MCTP

Accessories:

Blank = No Option For Accessories
LTRE-2X2-SMK = SURFACE MOUNTING KIT LTRE-2X2
WEC-7RC=OPTIONAL REMOTE CONTROL

Factory-Installed Options:

Blank = No Option For Accessories
OPT-EM-LTRE= EMERGENCY BACKUP BATTERY MOUNTED ON TOP OF FIXTURE
OPT-FWH-63= 6FT 3-WIRE WHIP
OPT-FWH-65= 6FT 5-WIRE WHIP
OPT-FWH-66= 6FT 6-WIRE WHIP
OPT-SEN-3MRLV-5=PROGRAMMABLE MICROWAVE BI-LEVEL SENSOR

Packaging Info:

	QTY	UOM	L (IN)	W (IN)	D (IN)	Weight (LBS)
Master Carton	2	Case	25.9	25.2	6	15.5

NO PARTIAL. MUST BUY IN MASTER PKG. QTY.

ACCESSORIES & MOUNTING KIT:



LTRE-2X2-SMK

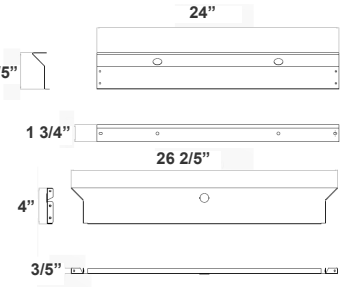



WEC-7RC

BUILT-IN SWITCH:



MULTI-CCT & WATTAGE

FACTORY-INSTALLED OPTIONS:



OPT-EM-LTRE



OPT-SEN-3MRLV-5



OPT-FWH-63
OPT-FWH-65
OPT-FWH-66

Phone: (877) 805-2252 | Fax: (877) 805-2252
www.westgatemfg.com |