LRD SERIES RESIDENTIAL LIGHTING

LRD-10W-MCT5-3WTR

3" LED ARCHITECTURAL WINGED OPEN RECESSED LIGHTS

MCT5 Multi Color Temperature (Selectable)

WESTGATE

THE FUTURE IS HERE...AND IT'S QUITE BRIGHT!

Customer Name:

Project Name:

Note: | Type:



MATTE GOLD



WHITE



BLACK ON BLACK



BLACK



CLEAR



MATTE SILVER

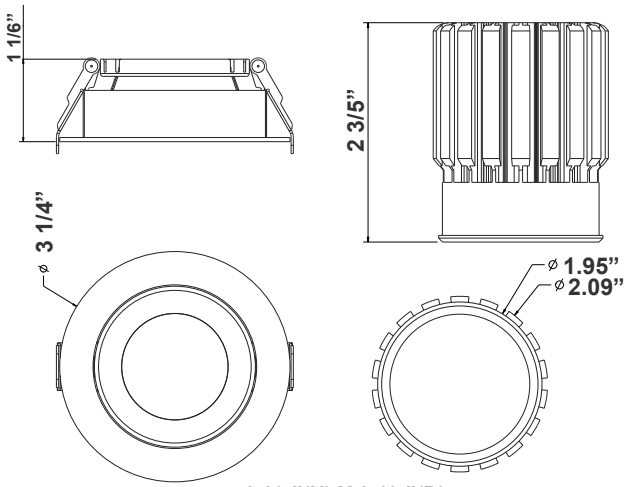

3 3/4"(H) X 3 1/4"(D)
Box Dimensions:
5-1/4" x 1-5/8" x 1-1/8"
Junction Area Dimensions:
2-1/16" x 1-5/8" x 1-1/8"

Ideal for New as well as old residential and commercial constructions.

Features

- 3" (2-1/8" Actual) LED Winded Recessed Trim
- Die-Cast Aluminum With White Powder Coat Finish
- 5-Year Warranty
- Junction Box Included With Fixture

Technical Specifications

Electrical:

- Voltage: 120VAC
- Wattage: 10W
- Power Factor: >0.90
- Efficacy: Up to 70 LM/W

Mechanical:

- Up to 9 AWG18 Wires
- Die-Cast Aluminum With White Powder Coat Finish
- Clear Glass Lens
- Junction Box Rated Up to 9 AWG18 Wires
- Operating Temperature: 104°F
- Lifespan: 50,000 Hrs.
- IC-Rated, No Housing Required
- Damp Location Approved

Lighting:

- Multi CCT (Selectable Switch on the Back of The Driver)
- Dimming: Dimmable Down to 10% Using Standard TRIAC LED Dimmer
- Total lumens: 700LM
- Color Temperature: 2700K/3000K/3500K/4000K/5000K
- Color Rendering Index: >90
- Beam Angle: 24°

Applications:

- Ideal for New as well as old residential and commercial constructions.

Other Models:

- 7W | 490LM | LRD-7W-MCT5-3WTR-MG/WH/ABK/BK/C/HZ

Phone: (877) 805-2252 | Fax: (877) 805-2252
www.westgatemfg.com

WG-ZY-Z4-2Z

Photometrics: LRD-10W-MCT5-3WTR

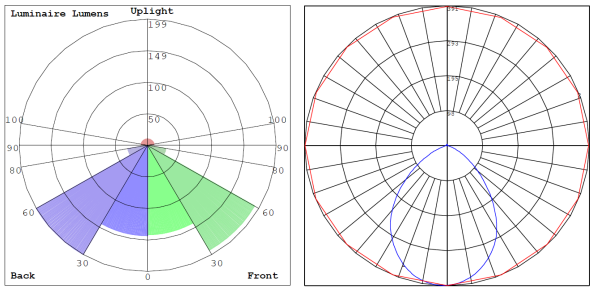

BUG Rating: B1-U2-G0

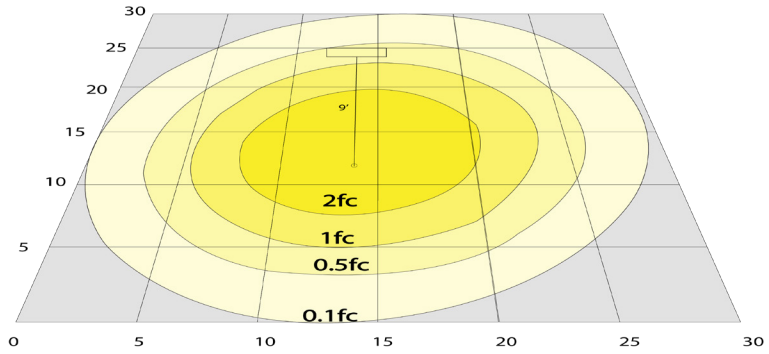

10W 5000K, Area 30'x 30' Mounting Height: 9'

Other Views:



LRD-WTR3-MG + LRD-EGN-10W-MCT5-D = LRD-10W-MCT4-3WTR-MG



LRD-WTR3-WH + LRD-EGN-10W-MCT5-D = LRD-10W-MCT5-3WTR-WH



LRD-WTR3-ABK + LRD-EGN-10W-MCT5-D = LRD-10W-MCT5-3WTR-ABK



LRD-WTR3-BK + LRD-EGN-10W-MCT5-D = LRD-10W-MCT5-3WTR-BK

Phone: (877) 805-2252 | Fax: (877) 805-2252
www.westgatemfg.com



LRD-WTR3-C | LRD-EGN-10W-MCT5-D | LRD-10W-MCT5-3WTR-C



LRD-WTR3-HZ | LRD-EGN-10W-MCT5-D | LRD-10W-MCT5-3WTR-HZ

Performance Table: LRD-10W-MCT5-3WTR

MODEL NO.	Wattage	Voltage	Lumens	Color Temp.	BUG Rating	LPW
LRD-10W-MCT5-3WTR	10W	120V	700LM	2700K	B1-U2-G0	70
				3000K		
				3500K		
				4000K		
				5000K		

Accessory:

Blank = No Option For Accessories
LRD-FGL = LRD SERES FROSTED GUASS LENS
RSL3-RI = 3" ROUND ROUGH-IN PLATE, 26" LONG

Accessory:



LRD-FGL



RSL3-RI
3" Round Rough-in Plate,26" long

Sample Ordering

Model		Watta ge		Color Temp.		Size		Housing
LRD	-	10W	-	MCT5	-	3WTR	-	

MG = MATTE GOLD
WH = WHITE
ABK = BLACK ON BLACK
BK = BLACK
C = CLEAR
HZ = MATTE SILVER