LPNG SERIES Commercial Lighting

WESTGATE
THE FUTURE IS HERE...AND IT'S QUITE BRIGHT!

LPNG-RMK-2X2
ACCESSORIES FOR PANEL LIGHTS

Customer Name:
Project Name:
Note: | Type:

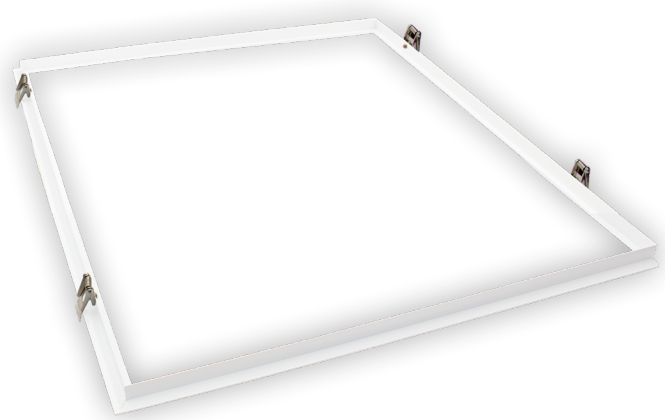

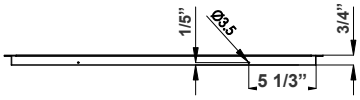

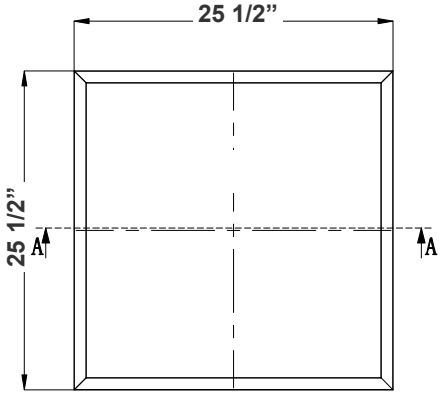

25 1/2" x 25 1/2" x 3/4"

Cutout Dimensions: 23-7/8" X 23-7/8"

2x2' Recessed Mounting Flange Kit for installation in hard ceilings and surfaces

Technical Specifications

- Construction: Extruded aluminum construction with mitered corners for square fit
- Finish: Formulated for high durability and long-lasting color
- Compatible with any standard flat panel and troffer fixtures
- 4 stainless steel snapping clips

Other Views:



Side View

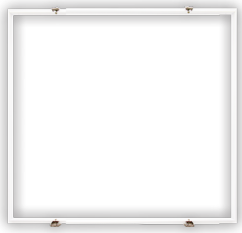

Front View



Close up View

Other Models:

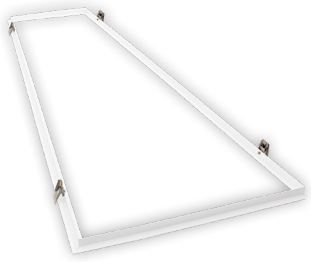

• LPNG-RMK-1X4

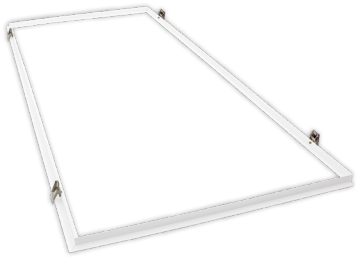

• LPNG-RMK-2X4

WESTGATE

Phone: (877) 805-2252 | Fax: (877) 805-2252
www.westgatemfg.com