# LFXE SERIES Outdoor Lighting

LFXE-MD-50-100W-MCTP-KN-P-WH

BUILDER SERIES FLOOD/AREA LIGHTS WITH PHOTOCELL

MCTP Multi Color Temperature & Multi Power/Wattage (Selectable)

WESTGATE

THE FUTURE IS HERE...AND IT'S QUITE BRIGHT!

Customer Name:

Project Name:

Note: | Type:



Ideal for general site lighting, alleys, loading docks, doorway, pathway, and parking areas.

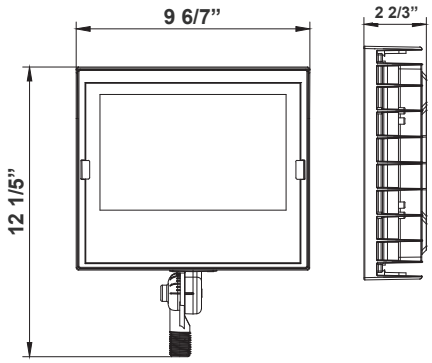


12 1/5”(H) x 9 6/7”(W) x 2 2/3”(D)

## Features

- Solid State Lighting Technology for Long Life
- No Maintenance Needed and High-Efficiency
- Optic Lens Type: III
- Multi-CCT Power - The Switch Is On the Bottom Of The Fixture

## Technical Specifications

### Electrical:

- Voltage: 120~277VAC/50~60 Hz
- Wattage: 50W/80W/100W
- Power Factor: >0.9
- Efficacy: 135 LPW

### Mechanical:

- Die-cast Aluminum Housing With Powder Coat Finish (Dark Bronze And White Finish)
- Solid State Lighting Technology For Long Life, No Maintenance Needed and High-Efficiency
- Photocell Included (With Disconnect Switch)
- High Conductive Aluminum LED Board
- 90° Adjustable 1/2” Knuckle Mount
- Operating Temperature: -40°F to 104°F
- IP Rating: IP65, Suitable for Wet Locations
- 7-Year Warranty

### Lighting:

- Multi-CCT Power - The Switch Is On The Bottom Of The Fixture
- Multi CCT: Selectable Wattages & CCTs
- Dimming: 0~10V Dimmable
- Optic Lens Type: III
- Cord Type: 13” #18 AWG stranded wires
- Color Temperature: 3000K/4000K/5000K
- Total Lumens: 13500LM Max.
- Color Rendering Index: ≥ 82
- Beam Angle: 120°X 90°
- 70,000 Hours Rated Life

### Applications:

- Ideal for general site lighting, alleys, loading docks, doorway, pathway and parking areas
- Replace existing HID flood lights/ wall packs

### Other Models:

- 100W | 13500LM | LFXE-MD-50-100W-MCTP-KN-P-BK

Phone: (877) 805-2252 | Fax: (877) 805-2252
www.westgatemfg.com |

WG-ZB-Y6-2Z

## Photometrics: LFXE-MD-50-100W-MCTP-KN-P-WH

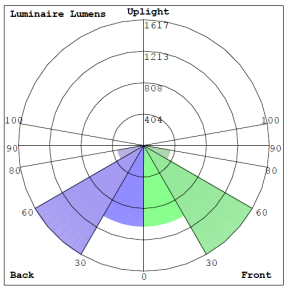


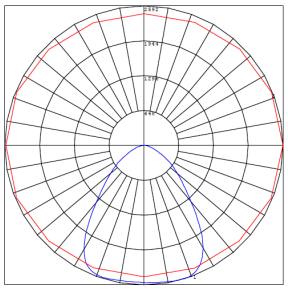

BUG Rating: B3-U0-G1

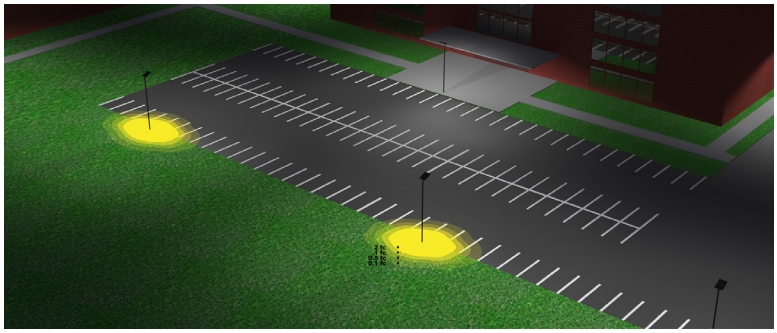

Area 45'x 55'  Mounting Height: 20'

## Other Views:



Side View



Front View



Back View

## Performance Table: LFXE-MD-50-100W-MCTP-KN-P-WH

| MODEL NO. | Wattage | Voltage | Lumens | Color Temp. | BUG Rating | LPW |
|---|---|---|---|---|---|---|
| LFXE-MD-50-100W-MCTP-KN-P-WH | 50W | 120~277V | 6750LM | 3000K<br>4000K<br>5000K | B3-U0-G1 | 135 |
| | 80W | | 10800LM | | | |
| | 100W | | 13500LM | | | |

# Sample Ordering

| Model | Size | Min.Wattage | Max.Wattage | Color Temp. | Mount | Photocell | Finish |
|---|---|---|---|---|---|---|---|
| LFXE | MD | 50 | 100W | MCTP | KN | P | WH |

## Accessories Options

**Blank** = No Option For Accessories
**WRC-3-BRZ** =Weatherproof cover with three(3) 1/2" hubs

## ACCESSORIES AND MOUNTING OPTIONS



B-41



Mounts to landscape post
or any 1/2" hub



WRC-3-BRZ
Weatherproof cover with Three
(3) 1/2" hubs



Fully adjustable 1/2" threaded knuckle for aiming versatility