LFXE SERIES Outdoor Lighting

LFXE-MD-50-100W-MCTP-KN-P-BK

BUILDER SERIES FLOOD/AREA LIGHTS WITH PHOTOCELL

MCTP Multi Color Temperature & Multi Power/Wattage (Selectable)

WESTGATE

THE FUTURE IS HERE...AND IT'S QUITE BRIGHT!

Customer Name:

Project Name:

Note: | Type:



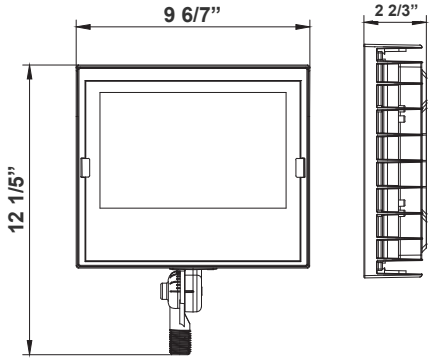

12 1/5”(H) x 9 6/7”(W) x 2 2/3”(D)

Ideal for general site lighting, alleys, loading docks, doorway, pathway, and parking areas.

Features

- Solid State Lighting Technology for Long Life
- No Maintenance Needed and High-Efficiency
- Optic Lens Type: III
- Multi-CCT Power - The Switch Is On the Bottom Of The Fixture

Technical Specifications

Electrical:

- Voltage: 120~277VAC/50~60 Hz
- Wattage: 50W/80W/100W
- Power Factor: >0.9
- Efficacy: 135 LPW

Mechanical:

- Die-cast Aluminum Housing With Powder Coat Finish (Dark Bronze And White Finish)
- Solid State Lighting Technology For Long Life, No Maintenance Needed and High-Efficiency
- Photocell Included (With Disconnect Switch)
- High Conductive Aluminum LED Board
- 90° Adjustable 1/2” Knuckle Mount
- Operating Temperature: -40°F to 104°F
- IP Rating: IP65, Suitable for Wet Locations
- 7-Year Warranty

Lighting:

- Multi-CCT Power - The Switch Is On The Bottom Of The Fixture
- Multi CCT: Selectable Wattages & CCTs
- Dimming: 0~10V Dimmable
- Optic Lens Type: III
- Cord Type: 13” #18 AWG stranded wires
- Color Temperature: 3000K/4000K/5000K
- Total Lumens: 13500LM Max.
- Color Rendering Index: ≥ 82
- Beam Angle: 120°X 90°
- 70,000 Hours Rated Life

Applications:

- Ideal for general site lighting, alleys, loading docks, doorway, pathway and parking areas
- Replace existing HID flood lights/ wall packs

Other Models:

- 100W | 13500LM | LFXE-MD-50-100W-MCTP-KN-P-WH

Phone: (877) 805-2252 | Fax: (877) 805-2252
www.westgatemfg.com |

WG-ZB-Y6-2Z

Photometrics: LFXE-MD-50-100W-MCTP-KN-P-BK

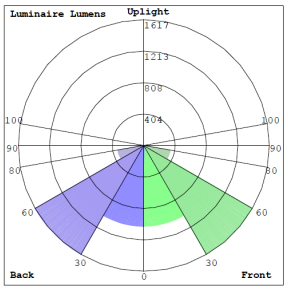

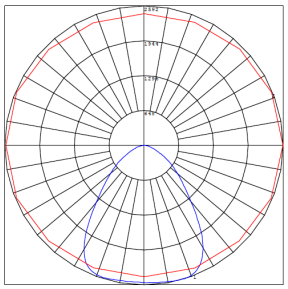

BUG Rating: B3-U0-G1

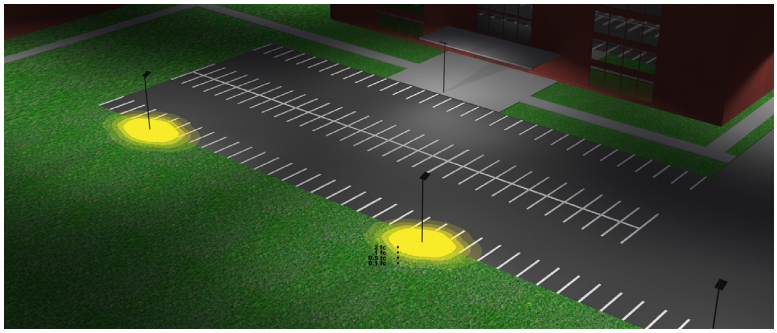

Area 45'x 55' Mounting Height: 20'

Other Views:



Side View



Front View



Back View

Performance Table: LFXE-MD-50-100W-MCTP-KN-P-BK

MODEL NO.	Wattage	Voltage	Lumens	Color Temp.	BUG Rating	LPW
LFXE-MD-50-100W-MCTP-KN-P-BK	50W	120~277V	6750LM	3000K 4000K 5000K	B3-U0-G1	135
	80W		10800LM			
	100W		13500LM			

Sample Ordering

Model	Size	Min.Wattage	Max.Wattage	Color Temp.	Mount	Photocell	Finish
LFXE	MD	50	100W	MCTP	KN	P	BK

Accessories Options

Blank = No Option For Accessories
WRC-3-BRZ =Weatherproof cover with three(3) 1/2" hubs

ACCESSORIES AND MOUNTING OPTIONS



B-41



Mounts to landscape post
or any 1/2" hub



WRC-3-BRZ
Weatherproof cover with Three
(3) 1/2" hubs



Fully adjustable 1/2" threaded knuckle for aiming versatility