LFX-PASF SERIES

OUTDOOR LIGHTING

LFX-PASF **LFX-PASF-WH**
LFX-PASF-BK

Pole Adapter for Slip-Fitter Mounted Flood Lights



BRONZE BLACK WHITE

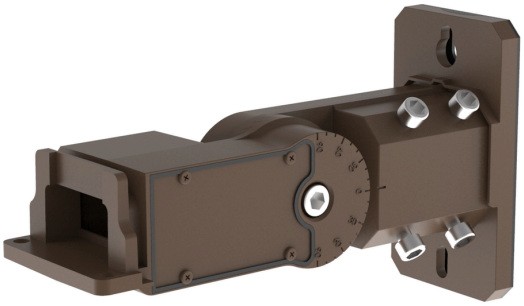

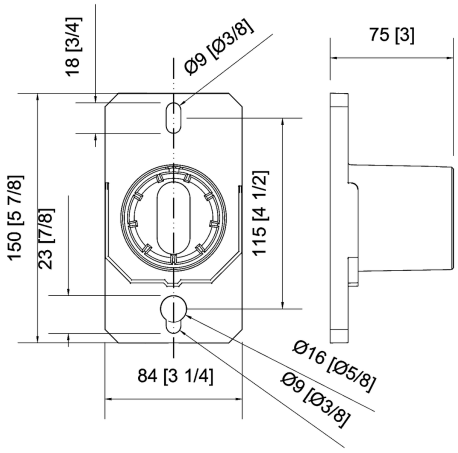

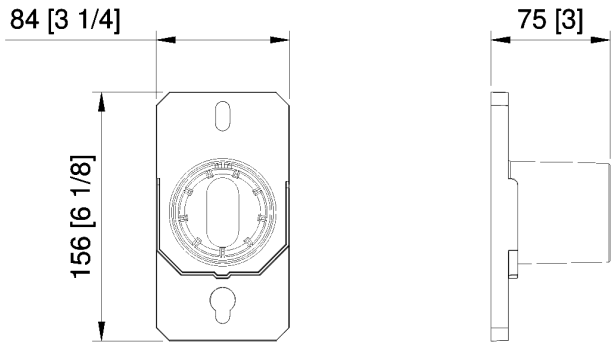

Technical Drawing: 3-1/4" (W) x 6-1/8" (H) x 3" (D)

Customer Name:

Project Name:

Note: Type:

The LFX-PASF Series is an aluminum wall-mounted pole adapter designed to provide a horizontal standard-size tenon for slip-fitter mounted flood lights. Designed for direct compatibility with the Westgate LFX-SF standard slip fitter, it provides an additional mounting option for LFX, LFXPRO, LF4PRO, LFXE and LFXMAX Series flood lights. The adapter can also accommodate other compatible fixtures using a slip fitter designed for a standard tenon. Available in bronze, black and white finishes for coordinated outdoor lighting installations.

FEATURES

- Converts a vertical wall or mounting surface into a horizontal tenon mounting point for slip-fitter equipped flood lights
- Compatible with LFX-SF standard slip fitter
- Standard tenon design allows compatibility with other fixtures using a compatible standard slip fitter
- Provides adjustable fixture aiming when used with the LFX-SF slip fitter
- Aluminum construction suitable for outdoor lighting applications
- Provides an additional mounting option for LFX, LFXPRO, LF4PRO, LFXE and LFXMAX Series
- Three finish options coordinate with compatible flood-light finishes
- LFX-SF slip fitter sold separately

SPECIFICATIONS

ELECTRICAL:

- No electrical components
- Passive mounting accessory; no electrical connection required

MECHANICAL:

- Aluminum housing
- Wall-mounted pole adapter for slip-fitter installation
- Integrated horizontal standard-size tenon
- Designed for direct installation of the LFX-SF standard slip fitter
- Overall dimensions: 5-7/8" H × 3-1/4" W × 3" D
- Slotted mounting holes provide installation adjustment
- Available finishes: Bronze, Black and White

LIGHTING:

- Mounting accessory only; no light source or optical components

APPLICATIONS:

- LFX Series
- LFXPRO Series
- LF4PRO Series
- LFXE Series
- LFXMAX Series

Phone/Fax: (877) 805-2252
www.westgatemfg.com

ACCESSORIES

MODEL NAMES	DESCRIPTION	IMAGE
LFX-SF	**Standard Slip Fitter** - Installs directly over the LFX-PASF tenon - Provides adjustable fixture aiming - Required when using the LFX-PASF with compatible Westgate flood lights - Sold separately	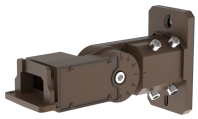

Phone/Fax: (877) 805-2252
www.westgatemfg.com