LFX-MD SERIES Outdoor Lighting

LFX-MD-30-50W-MCTP-TR-P

MCTP Multi Color Temperature & Multi Power/Wattage (Selectable)

WESTGATE
THE FUTURE IS HERE...AND IT'S QUITE BRIGHT!

Customer Name:

Project Name:

Note: | Type:

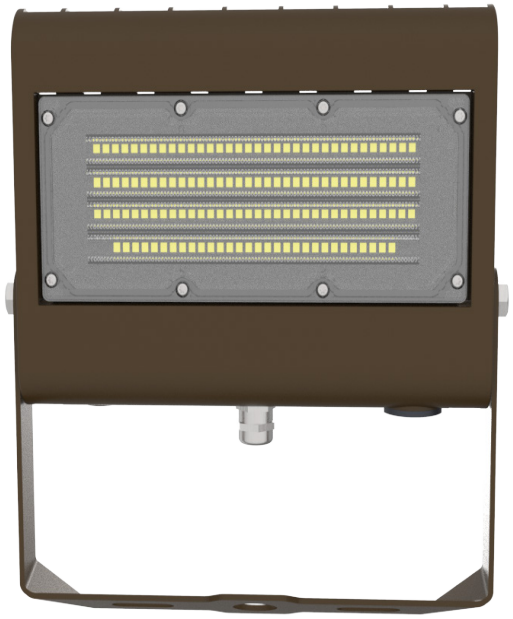

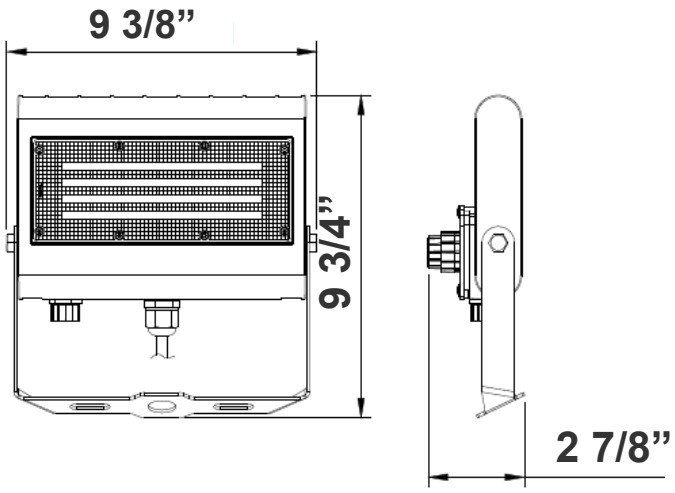

Ideal for general site lighting, alleys, loading docks, doorway, pathway, and parking areas.

9 3/4”(H) x 9 3/8”(W) x 2 7/8”(D)

Features

- DLC Premium & LED High-Lumen Flood lights
- Solid State Lighting Technology for Long Life
- No Maintenance Needed and High-Efficiency
- 70,000 Hours Rated Life
- 7-Year Warranty
- Optic Lens Type: III
- Multi-CCT Power - The Switch is on the Bottom of the Fixture

Technical Specifications

Electrical:

- Voltage: 120~277V AC/50~60 Hz
- Wattage: 30W/40W/50W
- Power Factor: >0.9
- Efficacy: 130 LPW

Mechanical:

- Die-cast Aluminum Housing with Powder Coat Finish (Dark Bronze and White Finish)
- Pre-Installed DC Button Photocell
- LED: Lumileds Luxeon 2835 High Flux LED
- Solid State Lighting technology for long life, no Maintenance needed and High-Efficiency
- High Conductive Aluminum LED Board
- 270° Adjustable Yoke Mount
- IP Rating: IP65
- Operating Temperature: -40°F to 122°F
- Suitable for Wet Locations

Lighting:

- Dimming: 0~10V Dimmable
- Optic Lens Type: III
- Cord type: 13” #18 AWG stranded wires
- Color temperature: 3000K/ 4000K/ 5000K
- Total Lumens: 6500LM Max.
- Multi-CCT Power - The Switch is on the Bottom of the Fixture
- Color Rendering Index: ≥ 82
- Beam Angle: 120°X 90°

Applications:

- Ideal for general site lighting, alleys, loading docks, doorway, pathway and parking areas.
- Replace existing HID flood lights/ wall packs

UL LISTED | WET LOCATION | IP65 | DIMMING 1-10V | 7 YEAR LIMITED WARRANTY

Phone: (877) 805-2252 | Fax: (877) 805-2252
www.westgatemfg.com |

WG-ZB-Y6-2Z

Photometrics: LFX-MD-30-50W-MCTP-TR-P

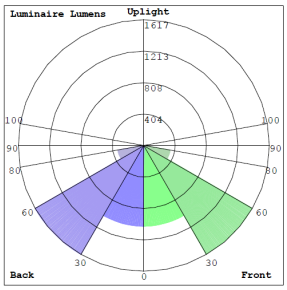

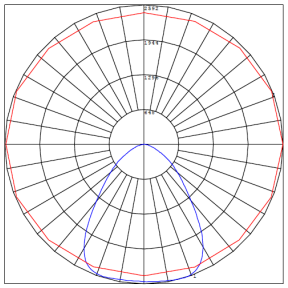

BUG Rating: B3-U0-G1

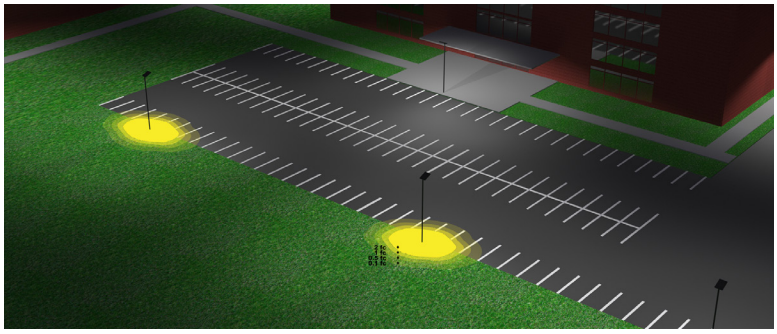

Area 45'x 55' Mounting Height: 20'

Other Views:



Side View

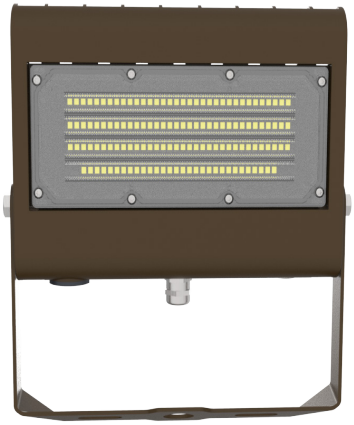

Front View



Back View

Performance Table: LFX-MD-30-50W-MCTP-TR-P

MODEL NO.	Wattage	Voltage	Lumens	Color Temp.	BUG Rating	LPW
LFX-MD-30-50W-MCTP-TR-P	30W 40W 50W	120~277V	3900LM 5200LM 6500LM	3000K 4000K 5000K	B3-U0-G1	130

Sample Ordering

Model	Size	Min.Wattage	Max.Wattage	Color Temp.	Mount	Photocell
LFX	MD	30	50W	MCTP	TR	P

Accessories Options

Blank = No Option For Accessories
LF3-SH2 = Shroud for LF3 50W Reversible
LF3-SH2FG = Full-Glare Shroud for LF3 50W

ACCESSORIES OPTIONS



LF3-SH2
Shroud (Reversible)



LF3-SH2FG
Full-Glare Shroud

Color Options: Custom Color Available

Black Silver White Dark Bronze (Default color) Green Red Yellow



Phone: (877) 805-2252 | Fax: (877) 805-2252
www.westgatemfg.com |