LF4MAX SERIES Outdoor Lighting

WESTGATE
THE FUTURE IS HERE...AND IT'S QUITE BRIGHT!

LF4MAX-XL-300W-MCTPB-P-480V

LF4MAX SPEC SIGNATURE MAXIMUM-FEATURE ROUND-BACK FLOOD LIGHT

MCTP Multi Color Temperature & Multi Power/Wattage (Selectable)

Customer Name:

Project Name:

Note: | Type:



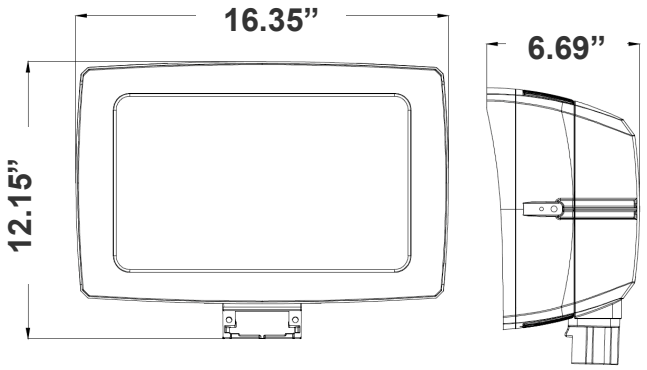

16.35”(W) x 12.15”(H) x 6.69”(D)

Round-back floodlight with U-bracket offering full control of beam angle, CCT, wattage, and photocell. Model MTP4 arriving this season.

Features

- 7-Year Warranty
- Multi-CCT & Multi-Power - The Switches are on the Bottom of the Fixture

Technical Specifications

Electrical:

- Voltage: 480V AC/50~60 Hz
- Wattage: 200W/240W/300W
- Power Factor: >0.9
- Efficacy: 140LPW

Mechanical:

- Housing: Die-cast Aluminum Housing with Powder Coat Finish
- Photocell Included (With Disconnect Switch)
- 6KV Lightning Surge Protection
- Cord Type: 6’ SJTW 18/3 AWG cable
- Operating Temperature: -40°F to 104°F
- Suitable for Wet Locations
- Effective projected areas (EPA’s) are:
  Front = 0.38 square feet
  Side = 0.30 square feet
  Face = 1.05 square feet
- IP Rating: IP65
- 7-Year Warranty

Lighting:

- Dimming: 0~10V Dimmable
- Multi-CCT & Multi-Power - The Switches are on the Bottom of the Fixture
- Total Lumens: 42000LM
- Color Temperature: 3000K/4000K/5000K
- Color Rendering Index: ≥ 70
- Adjustable Beam Angle: 135°x125°/120°x120°/
- 90°x90°
- 70,000 Hours Rated Life

Applications:

- Ideal for general site lighting, alleys, loading docks, doorway, pathway and parking areas.
- Replace existing HID flood lights/ wall packs

Phone: (877) 805-2252 | Fax: (877) 805-2252
www.westgatemfg.com |

WG-01072025

Photometrics: LF4MAX-XL-300W-MCTPB-P-480V

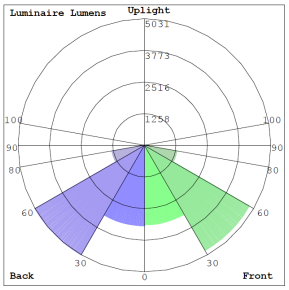

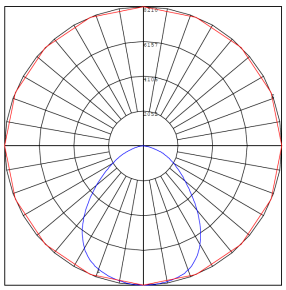

BUG Rating: B4-U0-G1

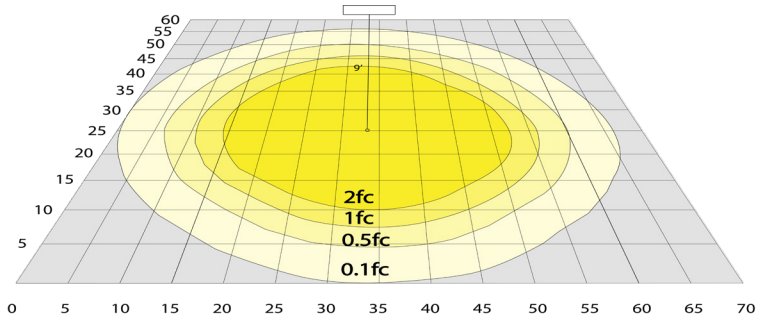

Area 60'x 70' Mounting Height: 20'

Other Views:

Bronze:



Side View



Front View

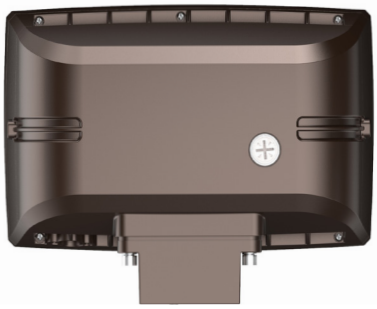

Back View

Performance Table: LF4MAX-XL-300W-MCTPB-P-480V

MODEL NO.	Wattage	Voltage	Lumens	Color Temp.	BUG Rating	LPW
LF4MAX-XL-300W-MCTPB-P-480V	200W 240W 300W	480V	28000LM 33600LM 42000LM	3000K 4000K 5000K	B4-U0-G1	140

Sample Ordering

Model		Size		Max.Wattage		Color Temp.	Photocell		Finishes		Voltage
LF4MAX	-	XL	-	300W	-	MCTPB	P	-		-	480V

WESTGATE

Phone: (877) 805-2252 | Fax: (877) 805-2252
www.westgatemfg.com |

Mounting Options:



LFX-ASA
Adjustable Straight Arm
3 1/3" x 7 7/8"

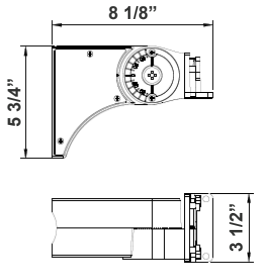



LFX-EXT
Straight Arm
3 1/3" x 6 3/4" x 4 3/8"

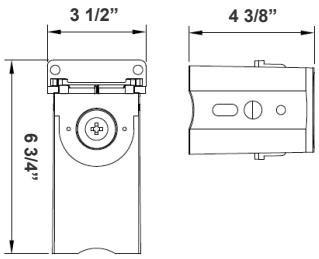



LFX-SF
Slip Fitter
3 1/3" x 7 7/8"
For 2-3/8" OD Pole/Pipe

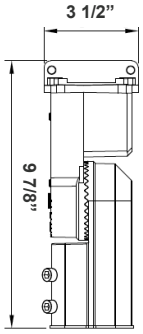



LFX-YK
Yoke
5 3/4" x 6" x 2"

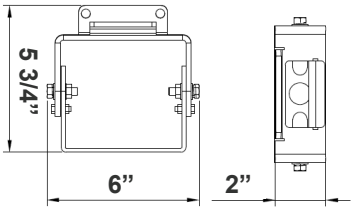

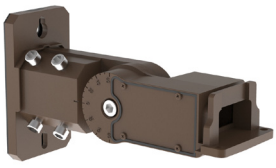

LFX-SF + LFX-PASF
Pole Adapter for Slip Fitter
6 1/8" x 3 1/4" x 3"

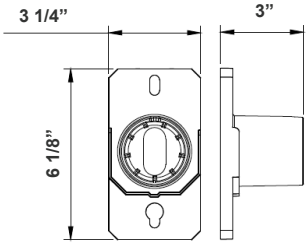

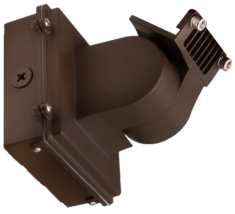

LFX-AWB
Adjustable Wall Junction Box
7 1/8" x 6 5/8" x 5 3/4"

