LF4MAX SERIES Outdoor Lighting

WESTGATE
THE FUTURE IS HERE...AND IT'S QUITE BRIGHT!

LF4MAX-SM-15-35W-MCTPB-TR-P

MAXIMUM-FEATURE ROUND-BACK FLOOD LIGHT WITH U BRACKET

MCTP Multi Color Temperature & Multi Power/Wattage (Selectable)

Customer Name:

Project Name:

Note: | Type:



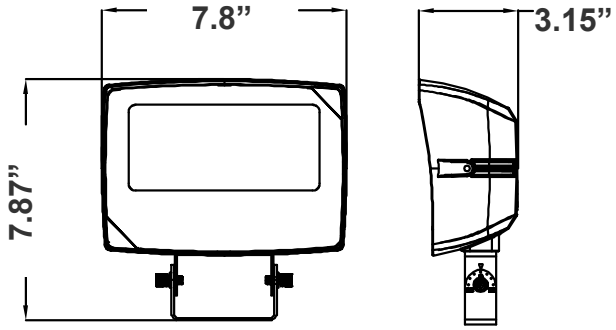

7.8”(W) x 7.87”(H) x 3.15”(D)

Round-back floodlight with U-bracket offering full control of beam angle, CCT, wattage, and photocell. Model MTP4 arriving this season.

Features

- 270° Adju stable Yoke Mount
- 7-Year Warranty
-
- Multi-CCT & Multi-Power - The Switches are on the Bottom of the Fixture

Technical Specifications

Electrical:

- Voltage: 120~277VAC/50~60 Hz
- Wattage: 15W/25W/35W
- Power Factor: >0.9
- Efficacy: 140LPW

Mechanical:

- Housing: Die-cast Aluminum Housing with Powder Coat Finish (Dark Bronze)
- 270° Adjustable Yoke Mount
- Photocell Included (With Disconnect Switch)
- 6KV Lightning Surge Protection
- Cord Type: 1.5’ SJTW 18/3 AWG Cable
- Operating Temperature: -40°F to 104°F
- Suitable for Wet Locations
- Effective projected areas (EPA’s) are:
  Front = 0.38 square feet
  Side = 0.30 square feet
  Face = 1.05 square feet
- IP Rating: IP65
- 7-Year Warranty

Lighting:

- Multi-CCT & Multi-Power - The Switches are on the Bottom of the Fixture
- Total Lumens: 4900LM
- Color Temperature: 3000K/4000K/5000K
- Color Rendering Index: ≥ 70
- Adjustable Beam Angle: 135°x125°/120°x120°/
- 90°x90°
- 70,000 Hours Rated Life

Applications:

- Ideal for general site lighting, alleys, loading docks, doorway, pathway and parking areas.
- Replace existing HID flood lights/ wall packs

c UL us LISTED | DLC LISTED PREMIUM | WET LOCATION | IP65

Phone: (877) 805-2252 | Fax: (877) 805-2252
www.westgatemfg.com |

WG-01072025

Photometrics: LF4MAX-SM-15-35W-MCTPB-TR-P

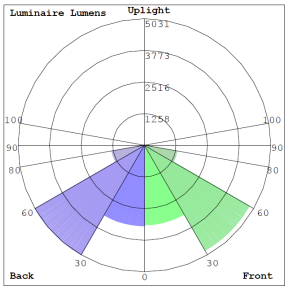

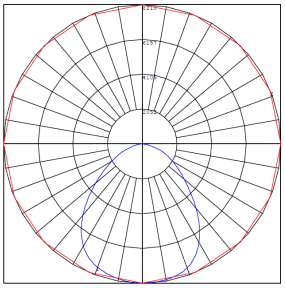

BUG Rating: B4-U0-G1

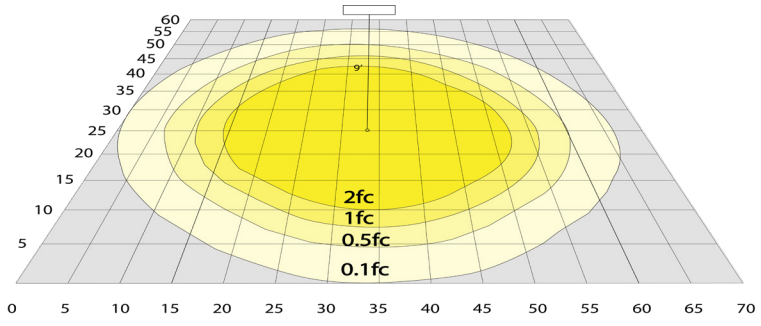

Area 60'x 70' Mounting Height: 20'

Other Views:



Side View

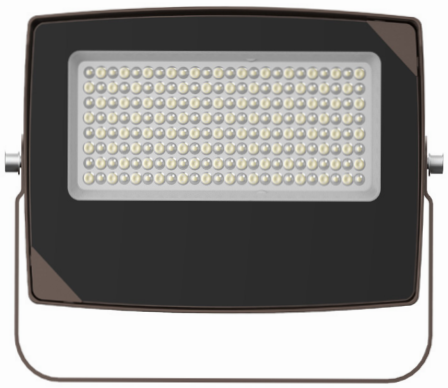

Front View



Back View

Performance Table: LF4MAX-SM-15-35W-MCTPB-TR-P

MODEL NO.	Wattage	Voltage	Lumens	Color Temp.	BUG Rating	LPW
LF4MAX-SM-15-35W-MCTPB-TR-P	15W 25W 35W	120~277V	2100LM 3500LM 4900LM	3000K 4000K 5000K	B4-U0-G1	140

Sample Ordering

Model		Size		Min.Wattage		Max.Wattage	Color Temp.	Bracket		Photocell
LF4MAX	-	SM	-	15	-	35W	MCTPB	TR	-	P

WESTGATE

Phone: (877) 805-2252 | Fax: (877) 805-2252
www.westgatemfg.com |