LDSW SERIES OUTDOOR LIGHTING

LDSW-MCT5-ORB

WESTGATE
THE FUTURE IS HERE...AND IT'S QUITE BRIGHT!



Customer Name:

Project Name:

Note: | Type:

MCT5 Selection:

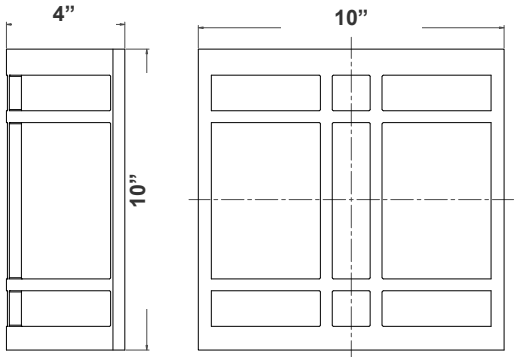

10”(H) x 10”(W) x 4”(D)

LED outdoor wall light with aluminum housing & powder-coated finish, acrylic diffuser. Ideal for general site lighting, residential buildings, doorway, pathway and parking areas.

Features

- Oil-Rubbed Bronze Finish
- 7-Year Warranty
- Multi CCT (Selectable Switch on the LED Board)
- Aluminum Housing and Steel Back Plate
- Rated life: 70,000 Hrs

Technical Specifications

Electrical:

- Voltage: 120V AC 50/60Hz
- Power Factor: >0.90
- Wattage: 12W
- Efficacy: 100 LPW
- Total Harmonic Distortion: ≤20 %

Mechanical:

- Aluminum Housing and Steel Back Plate
- Oil-Rubbed Bronze Finish
- Maximum Ambient Temperature: 50~113°F
- IP42, Suitable for outdoor use
- 7-Year Warranty

Lighting:

- Multi CCT (Selectable Switch on the LED Board)
- Lens: Acrylic PC lens
- Total Lumens: 1200LM
- Color Temperatures: 2700K/3000K/3500K/4000K/5000K
- Color Rendering Index: CRI ≥ 80
- Beam Angle: 120°
- Rated life: 70,000 Hrs

Applications:

- LED outdoor wall light with aluminum housing & powder-coated finish, acrylic diffuser. Ideal for general site lighting, residential buildings, doorway, pathway and parking areas.

Other Models:

- 12W | 1200LM | LDSW-MCT5-SIL

WET LOCATION

Phone: (877) 805-2252 | Fax: (877) 805-2252
www.westgatemfg.com

WG-02022020

Photometrics: LDSW-MCT5-ORB

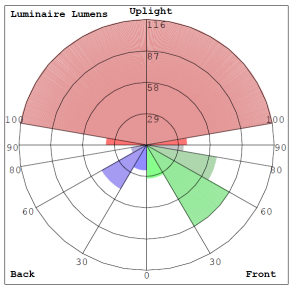

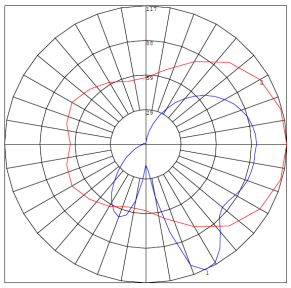

BUG Rating: B0-U3-G1

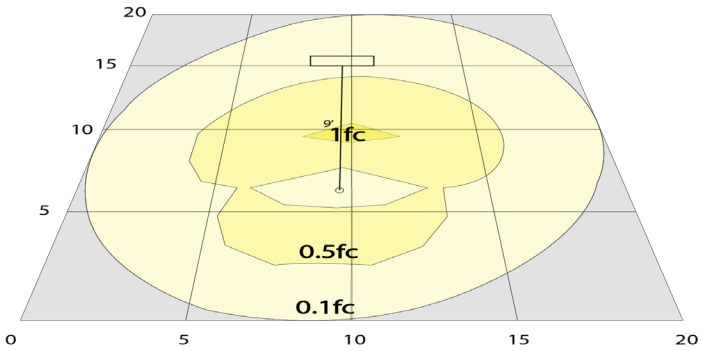

12W, 5000K, Area 20'x 20' Mounting Height: 9'

Other Views:



Bottom View



Front View



Back View

Performance Table: LDSW-MCT5-ORB

MODEL NO.	Wattage	Voltage	Lumens	Color Temp.	BUG Rating	LPW
LDSW-MCT5-ORB	12W	120V	1200LM	2700K/3000K/3500K/4000K/5000K	B0-U3-G1	100

Sample Ordering

Model		Color Temp.		Finish
LDSW	-	MCT5	-	ORB

Example:

1. LDSW-MCT5-ORB (FOR LDSW 12W MCT5 FIXTURE 120V)

Other Models: LDSW-MCT5-SIL



Bottom View



Front View



Back View