IGLC SERIES Outdoor Lighting

WESTGATE
THE FUTURE IS HERE...AND IT'S QUITE BRIGHT!

IGLC-D9-30W-MCTP-120D-D

STAINLESS STEEL COMMERCIAL INGROUND LIGHTS

MCTP Multi Color Temperature & Multi Power/Wattage (Selectable)

Customer Name:

Project Name:

Note: | Type:

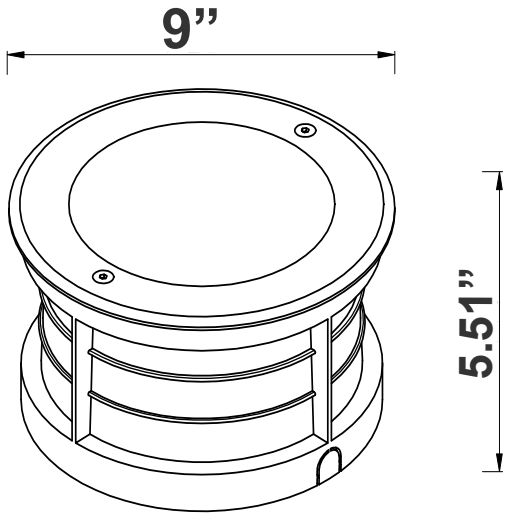

Stainless steel commercial inground lights designed for durability, corrosion resistance, and reliable outdoor illumination in high-traffic areas.

8.54”

5.51”(H) x 9”(D)

Features

- Die-Cast Aluminum With Powder Coat Finish
- 9” Dia Bronze
- Lens: Prismatic Lens
- 7-Year Warranty

Technical Specifications

Electrical:

- Voltage: 120~277 VAC, 50/60 Hz
- Wattage: 12W/20W/30W
- Power Factor: >0.95
- Efficacy: 85LM/W

Mechanical:

- Die-Cast Aluminum With Powder Coat Finish
- Recessed Wall Mount
- Traffic Rated: Designed to withstand heavy vehicular loads, ensuring durability and reliability in high-traffic areas. Ideal for parking lots, driveways, and roadways
- Can Be Installed In Concrete
- Operating Temperature: -40°F to 10°F
- 7-Year Warranty
- IP 65, Suitable for Wet Locations

Lighting:

- Dimming: 0-10V Dimming
- MCTP: Wattage & CCT Selectable Switches inside fixture
- Lens: Prismatic Lens
- Total Lumens: 2550LM Max.
- Color Temperatures: 3000K/4000K/5000K
- Color Rendering Index: CRI ≥ 80
- Beam Angle: 120°
- Rated life: 70,000 Hrs

Applications:

- Alleys
- Loading Docks
- Doorways
- Pathways
- Parking areas
- Residential area

Phone: (877) 805-2252 | Fax: (877) 805-2252
www.westgatemfg.com

WG-20240626

Other Views:
IGLC-D9-30W-MCTP-120D-D

Side View

Front View

Back View

Performance Table: IGLC-D9-30W-MCTP-120D-D

MODEL NO.	Wattage	Voltage	Lumens	Color Temp.	LPW
IGLC-D9-30W-MCTP-120D-D	12W 20W 30W	120~277V	1020LM 1700LM 2550LM	3000K 4000K 5000K	85

Sample Ordering

Model		Size		Wattage		Color Temp.		Degree		Dimming
IGLC	-	D9	-	30W	-	MCTP	-	120D	-	D

Phone: (877) 805-2252 | Fax: (877) 805-2252
www.westgatemfg.com