ICF SERIES Residential Lighting

ICF4SJBB

AIRTIGHT FIRE-RATED JUNCTION BOX

WESTGATE

THE FUTURE IS HERE...AND IT'S QUITE BRIGHT!

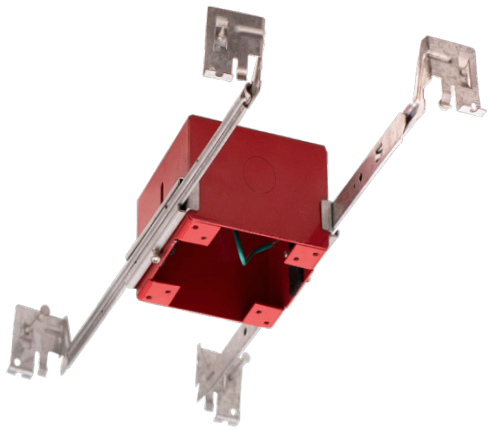

4" Fire-Rated Junction Box With Bar Hangers For Surface Mount Down Lights

Customer Name:

Project Name:

Note: | Type:

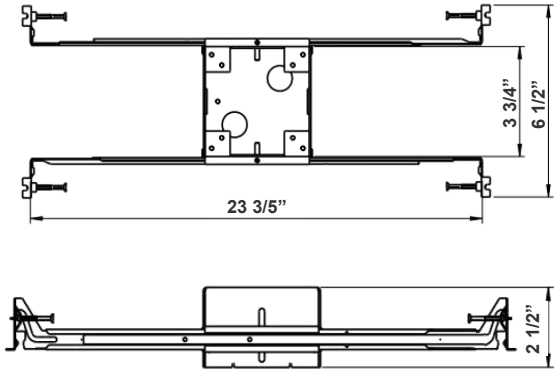

23 3/5"(H) x 6 1/2"(W) x 2 1/2"(D)

Features

- ETL Type IC Rated, complies with the requirements of the Standard(s) for Metallic Outlet Boxes (UL-514A) and are identified with the ETL Listed Mark
- ETL Listed for 2-Hour Fire Resistance to Meet and Exceed Strict Fire UL 263 Safety Code
- Rated for Direct Contact With IC Insulation
- ETL ASTM E283/E283M-19 Air Tight certified
- Integrated Non-Combustible Insulation Acts As a Sound Barrier Minimizing Sound Transfer Between Floors
- Light Fixtures Sold Separately

Technical Specifications

Mechanical:

- Die formed #16 gauge galvanized steel construction, Up to 120 minutes fire-rated L500 (floor-ceiling) & P500 (roof-ceiling) design.
- ETL Certificates ASTM E283 certified Air Tight
- UL 263 certificated up to 2 hour fire-rated
- Maximum Load: 50.70 Lbs.
- Suitable for Damp Locations

Junction Box:

- #21 gauge galvanized steel junction box with (4) 1/2" knockouts

Hanger Bars:

- Pre-Installed #21 gauge adjustable hanger bars with True Nail easy installation in regular lumber, engineered lumber, and Laminated Beams. Integral T-Bar slots for easy installation in T-Bars. Adjustable length (14"-24") and can be repositioned 90°. Score lines allow for tool-free hanger bar size reduction. Integral leveling flange allows for single-person installation while easily aligning the housings with the joists

Applications:

- The junction box housing must be installed per the International Building Code Section 714 guidelines to maintain up to 2 hour ceiling fire rating. Precise ceiling cutout required. For use in from 1/2" to 1-1/4" ceiling thickness.
- Compatible with surface mount fixtures
- See installation sheet for detailed information

Other Models:

- 16W | ICF4SJBP

AIR TIGHT | FIRE RATED | IC RATED

Phone: (877) 805-2252 | Fax: (877) 805-2252
www.westgatemfg.com | www.westgatecontrols.co

WG-ZB-Y6-2Z

Other Views:

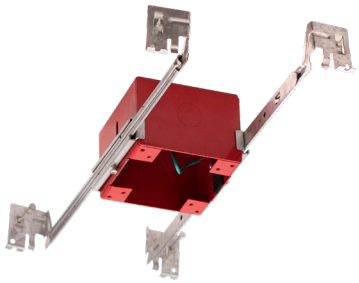

Side View



Top View

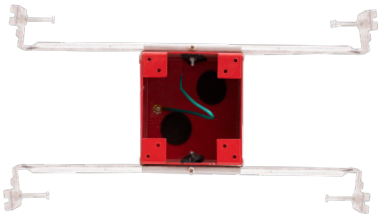

Bottom View

Westgate Compatible Surface Mount Fixtures:

DLS-MCT SERIES



DLS8-MCT

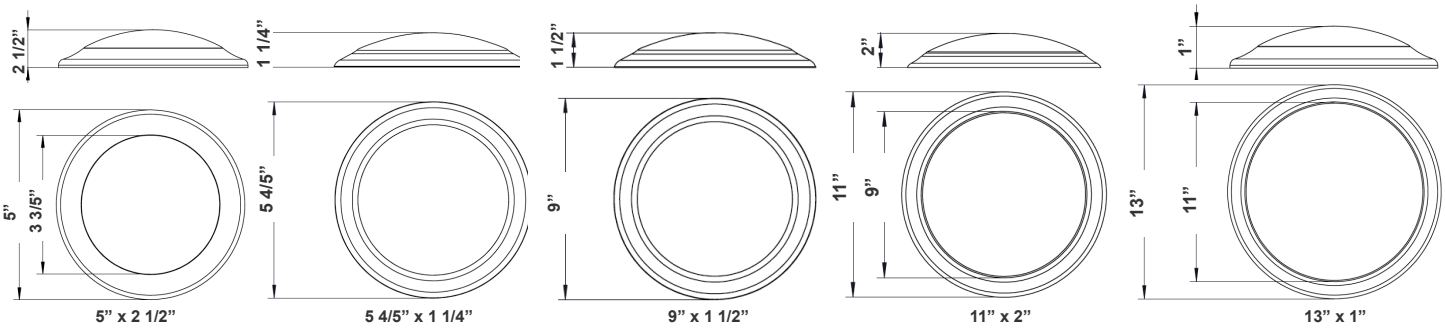

DLS4-MCT | DLS6-MCT | DLS8-MCT | DLS10-MCT | DLS12-MCT

MODEL NO.	Wattage	Voltage	Lumens	Color Temp.
DLS4-MCT	9W	120V	540LM	3000K/4000K/5000K
DLS6-MCT	15W	120V	900LM	3000K/4000K/5000K
DLS8-MCT	20W	120V	1200LM	3000K/4000K/5000K
DLS10-MCT	25W	120V	1500LM	3000K/4000K/5000K
DLS12-MCT	30W	120V	1800LM	3000K/4000K/5000K

Westgate Compatible Surface Mount Fixtures:

DLSE SERIES



DLSE6-MCT

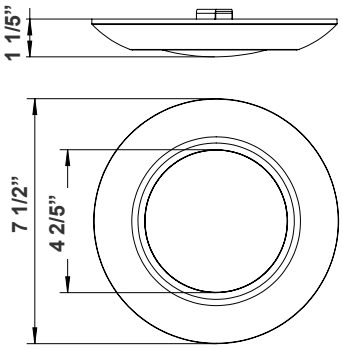

7 1/2” x 1 1/5”

MODEL NO.	Wattage	Voltage	Lumens	Color Temp.
DLSE4-MCT	9W	120V	540LM	3000K/4000K/5000K
DLSE6-MCT	15W	120V	1000LM	3000K/4000K/5000K

DLS-MCT-PIR SERIES



DLS8-MCT-PIR

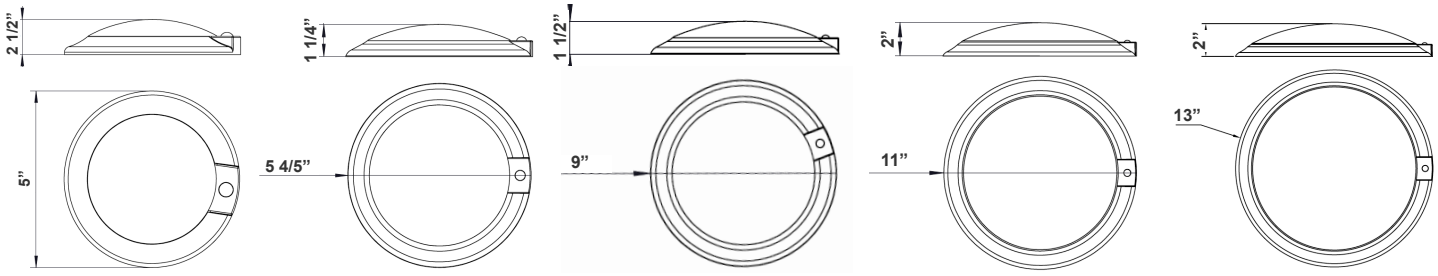

5” x 2 1/2” DLS4-MCT-PIR

5 4/5” x 1 1/4” DLS6-MCT-PIR

9” x 1 1/2” DLS8-MCT-PIR

11” x 2” DLS10-MCT-PIR

13” x 2” DLS12-MCT-PIR

MODEL NO.	Wattage	Voltage	Lumens	Color Temp.
DLS4-MCT-PIR	9W	120V	540LM	3000K/4000K/5000K
DLS6-MCT-PIR	15W	120V	900LM	3000K/4000K/5000K
DLS8-MCT-PIR	20W	120V	1200LM	3000K/4000K/5000K
DLS10-MCT-PIR	25W	120V	1500LM	3000K/4000K/5000K
DLS12-MCT-PIR	30W	120V	1800LM	3000K/4000K/5000K

WESTGATE

Phone: (877) 805-2252 | Fax: (877) 805-2252
www.westgatemfg.com | www.westgatecontrols.co

Westgate Compatible Surface Mount Fixtures:

DLS SERIES



DLS12-MCT-277

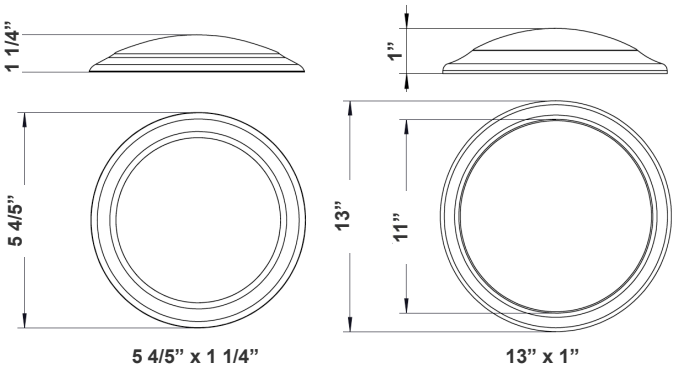

5 4/5” x 1 1/4”
DLS6-MCT-277V

13” x 1”
DLS12-MCT-277V

MODEL NO.	Wattage	Voltage	Lumens	Color Temp.
DLS6-MCT-277V	15W	277V	900LM	3000K/4000K/5000K
DLS12-MCT-277V	30W	277V	1800LM	3000K/4000K/5000K

FML-MCT SERIES



FML-R6-MCT

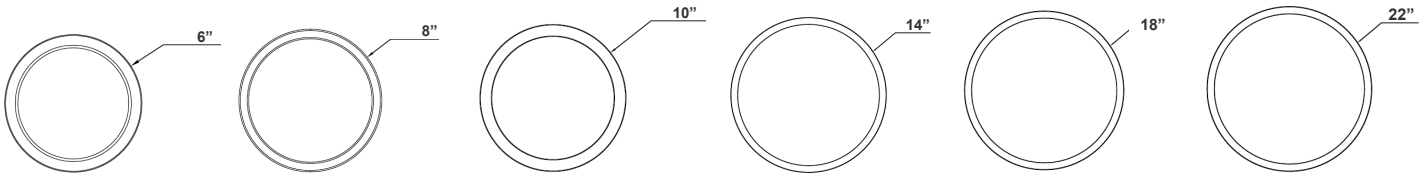

6” x 1”
FML-R6-MCT

8” x 1”
FML-R8-MCT

10” x 1”
FML-R10-MCT

14” x 1”
FML-R14-MCT

18” x 1”
FML-R18-MCT

22” x 1”
FML-22-MCT

MODEL NO.	Wattage	Voltage	Lumens	Color Temp.
FML-R6-MCT	11W	120V	660LM	3000K/4000K/5000K
FML-R8-MCT	14W	120V	840LM	3000K/4000K/5000K
FML-R10-MCT	17W	120V	1020LM	3000K/4000K/5000K
FML-R14-MCT	26W	120V	1560LM	3000K/4000K/5000K
FML-R18-MCT	30W	120V	2100LM	3000K/4000K/5000K
FML-R22-MCT	45W	120V	2700LM	3000K/4000K/5000K

Phone: (877) 805-2252 | Fax: (877) 805-2252
www.westgatemfg.com | www.westgatecontrols.co

Other Westgate Compatible Fixtures:
(more info at www.westgatemfg.com)



FDL-MCT5 SERIES



FMD-MCT5 SERIES



FSL-MCT5 SERIES



FCS SERIES



FCR SERIES

Other Model:

ICF4SJBP

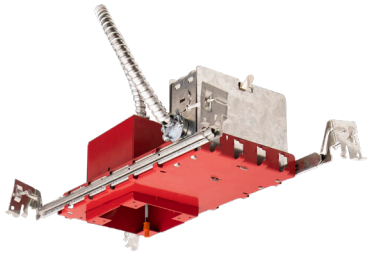

Side View

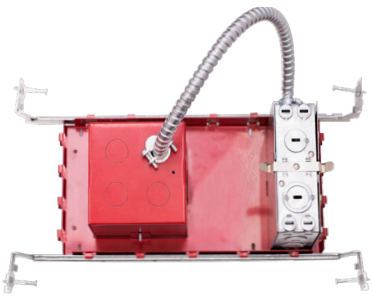

Top View



Bottom View