HPL SERIES Industrial Lighting

HPL-HB-75W-50K-E39

WESTGATE
THE FUTURE IS HERE...AND IT'S QUITE BRIGHT!



Customer Name:

Project Name:

Note: | Type:

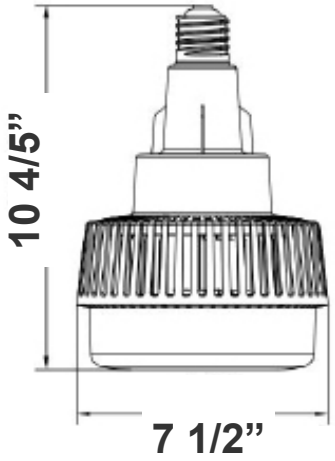

Energy-efficient, high-lumen output lamps designed for industrial, commercial, and large-area lighting applications. Delivers bright, long-lasting performance with reduced energy consumption.

10 4/5”(H) x 7 1/2”(W)

Features

- Lamp Base: E39 Mogul Base
- 5-Year Warranty
- Plastic Housing
- 50,000 Hours Rated Life

Technical Specifications

Electrical:

- Voltage: 120-277V AC 50/60Hz
- Wattage: 75W
- Power Factor: >0.9
- THD: ≤25%
- Efficacy: 108 LPW

Mechanical:

- Plastic Housing
- No fan housing (New Technology)
- Lamp base: E39 Mogul Base
- Operating temperature: -4°F ~ 122°F
- Do not use the lamps in enclosed fixtures
- Suitable for damp location
- 5-Year Warranty

Lighting:

- Lens: PC Lens
- Total lumens: 8100LM
- Color temperature: 3000K/5000K
- Color rendering index: >80
- Beam Angle: 120º
- 50,000 Hours Rated Life

Applications:

- Ideal for warehouses, factories, gymnasiums, parking garages, outdoor areas, and other large commercial or industrial spaces requiring powerful, energy-efficient lighting. Suitable for both indoor and outdoor high-mount installations.

Other Models:

- 60W | 6480LM | HPL-HB-60W-50K-E39
- 120W | 13000LM | HPL-HB-120W-50K-E39
- 140W | 15120LM | HPL-HB-140W-50K-E39

UL LISTED

Phone: (877) 805-2252 | Fax: (877) 805-2252
www.westgatemfg.com

WG-Z6-Z9-ZZ

Photometrics: HPL-HB-75W-50K-E39

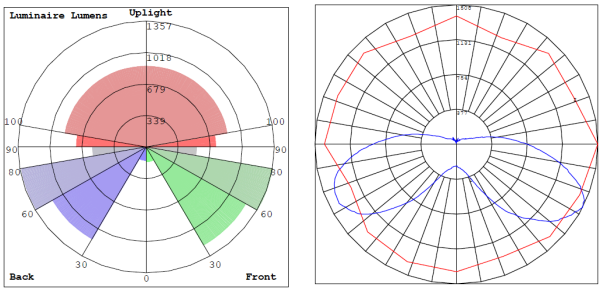

BUD Rating: B3-U4-G4

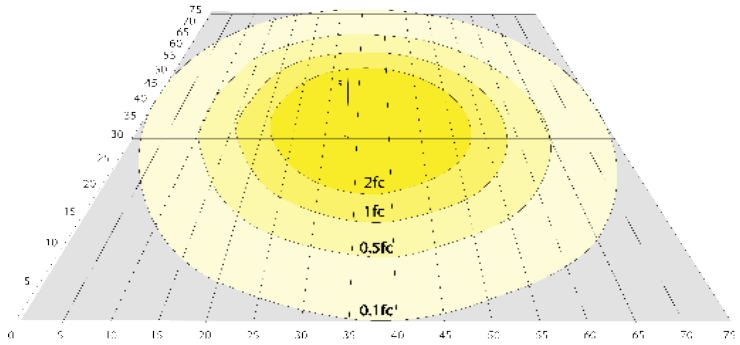

75W, 5000K Area 75'x 75' Mounting Height: 9'

Performance Table: HPL-HB-75W-50K-E39

MODEL NO.	Wattage	Voltage	Lumens	Color Temp.	BUG Rating	LPW
HPL-HB-75W-50K-E39	75W	120~277V	8100	5000K	B3-U4-G4	108

Sample Ordering

Model	High Power	Wattage	Color Temp.	Base
HLP	HB	75W		E39

50K = 5000K

Accessory:

Blank = No Option For Accessories
E39-REDUCER = REDUCES E39 BULB TO BE USED IN E26 SOCKET
HPL-HB-R2 = Optional PC Reflector for HPL-HB-75W

ACCESSORY:



E39-REDUCER



HPL-HB-R2

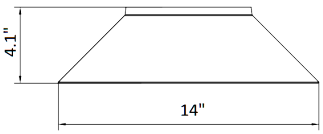

4.1"(H) X 14" (W)