GPX SERIES Outdoor Lighting

WESTGATE
THE FUTURE IS HERE...AND IT'S QUITE BRIGHT!

GPX-90-150W-MCTP-PM75
POST DISK LIGHT WITH PIPE MOUNT BRACKET

MCTP Multi Color Temperature & Multi Power/Wattage (Selectable)

Customer Name:
Project Name:
Note: | Type:

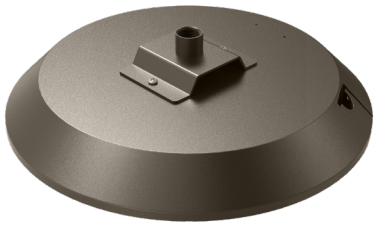

Pipe Mount with 3/4 Hub

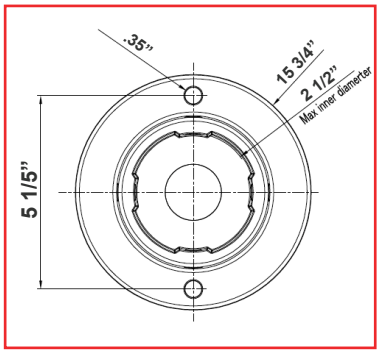

15 3/4" (D) X 3 1/2"(H)

Ideal for airports, auto dealerships, corporate offices, education, government, healthcare, industrial warehouses, municipal parking, gas stations, convenient stores, recreation and public venues, restaurants, hospitality, retail and grocery stores.

Features

- Aluminum Housing ,Outdoor Powder Coated
- 7-Year Warranty
- Multi CCT and Power: Selectable Switch Inside Of The Fixture

Technical Specifications

Electrical:

- Voltage: 100-277V AC 50/60Hz
- Wattage: 90W/120W/150W
- Power Factor: 0.95
- Efficacy: 150LM/W

Mechanical:

- Aluminum Housing , Outdoor Powder Coated
- 3/4" NPT Threaded Hub On The Top Allows Stem Mounting
- Programmable Bi-Level Motion Sensor & Emergency Backup Options
- Operating Temperature: -86°F~122°F
- IP Rating: IP66, Suitable for Wet Locations
- 7-Year Warranty

Lighting:

- Multi CCT and Power: Selectable Switch Inside Of The Fixture
- Dimmable: 0~10V Dimming
- LED: SMD 3030
- Total Lumens: 22500LM Max.
- Color Temperature: 3000K/4000K/5000K
- Color Rendering index: >70
- Beam Angle: Type V (150° X 150°)
- Lifespan: 70000 Hrs.

Applications:

- Ideal for Gardens, Amusement Parks, Residential Areas, Courtyards, Industrial Parks, and Pedestrian Streets.

DIMMING 1-10V WET LOCATION IP66

Phone: (877) 805-2252 | Fax: (877) 805-2252
www.westgatemfg.com

WG-04062022

Photometrics: GPX-90-150W-MCTP-PM75

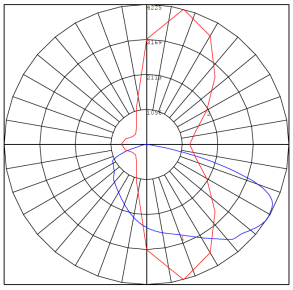

BUD Rating: B1-U1-G0

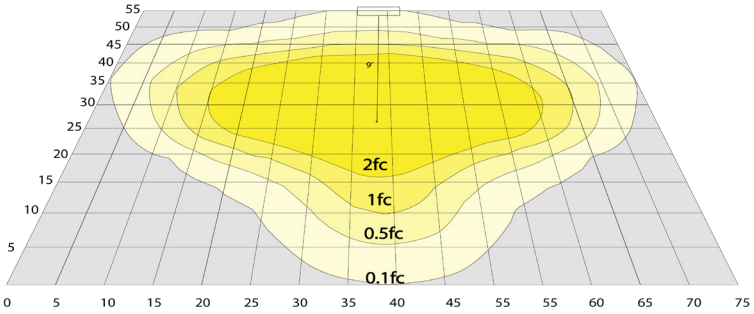

20W 5000K, Area55'x 75' Mounting Height: 9'

Other Views:

(Pipe is not included)

Mounting Bracket

Lens View

Top View

Performance Table: GPX-90-150W-MCTP-PM75

MODEL NO.	Wattage	Voltage	Lumens	Color Temp.	BUG Rating	LPW
GPX-90-150W-MCTP-PM75	90W 120W 150W	120-277V	13500LM 18000LM 22500LM	3000K 4000K 5000K	B1-U1-G0	150

Sample Ordering

Model		Min. Watt		Max. Watt		Color Temp.		Mount
GPX	-	90	-	150W	-	MCTP	-	PM75

Factory Installed Options:

Blank = No Option
OPT-EM-GPX = INTERNAL EMERGENCY BACK UP BATTERY
OPT-3MPC = MICROWAVE PHOTOCELL
OPT-CLR-95(BK/GR/SR/WH) = COLOR PAINT
OPT-SEN-3MR-3 = BI-LEVEL MICROWAVE SENSOR
WEC-8RC = REMOTE CONTROL
OPT-WP-480V = 480V OPTION
OPT-GPX-LENS-TYPE2S = FACTORY- INSTALLED TYPE 2 LENS
OPT-GPX-LENS-TYPE3S = FACTORY- INSTALLED TYPE 3 LENS
OPT-GPX-LENS-FL = FACTORY- INSTALLED FROSTED GLASS LENS

FACTORY INSTALLED OPTIONS:

OPT-EM-GPX

OPT-3MPC

OPT-SEN-3MR-3

Phone: (877) 805-2252 | Fax: (877) 805-2252
www.westgatemfg.com

COLOR CHART: * Choose from one of our Premium Colors with no set-up fee.

Gloss:

SILVER METALLIC 70 GLOSS T357-GR105

SILVER METALLIC 30 GLOSS T353-GR06

DARK RED 90 GLOSS P009-RD02

INTERNATIONAL ORANGE 90 GLOSS T009-OG26

SAFETY ORANGE 90 GLOSS T009-OG01

YELLOW 90 GLOSS T009-YL14

YELLOW 90 GLOSS T009-YL01

TRAFFIC GREEN 70 GLOSS T007-GN16

GREEN 70 GLOSS T007-GN13

GREEN 60 GLOSS C006-GN03

BLUE 90 GLOSS T009-BL01

DARK BLUE 80 GLOSS T008-BL20

RAL 8028 TERRA BROWN 90 GLOSS C209-BR358

Hammer:

WHITE HAMMER T013-WH09

BEIGE HAMMER T013-BG38

GREY HAMMER C013-GR08

SILVER HAMMERTONE T064-GR05

BLACK HAMMER T013-BK62

RED HAMMER T013-RD15

GREEN HAMMER T013-GN220

BLUE HAMMER T013-BL468

BRONZE HAMMER T012-BR161

Texture:

WHITE TEXTURE C031-WH120

FLINT GRAY TEXTURE T243-GR522

BLACK TEXTURE C241-BK109

RED TEXTURE T241-RD129

BLUE TEXTURE C241-BL544

OIL RUBBED BRONZE TEXTURE T291-BR251

Vein:

BLACK/WHITE VEIN T075-WH34

SILVER VEIN T375-BK26

COPPER VEIN EXTERIOR T075-BK211

GOLD VEIN T375-BK10

COPPER VEIN T375-BK07

Phone: (877) 805-2252 | Fax: (877) 805-2252
www.westgatemfg.com |