GPX SERIES Outdoor Lighting

WESTGATE
THE FUTURE IS HERE...AND IT'S QUITE BRIGHT!

GPX-18-60W-MCTP-A2-BK
POST DISK LIGHT WITH TWIN ARM

MCTP Multi Color Temperature & Multi Power/Wattage (Selectable)

Customer Name:
Project Name:
Note: | Type:



TWIN ARM Mount

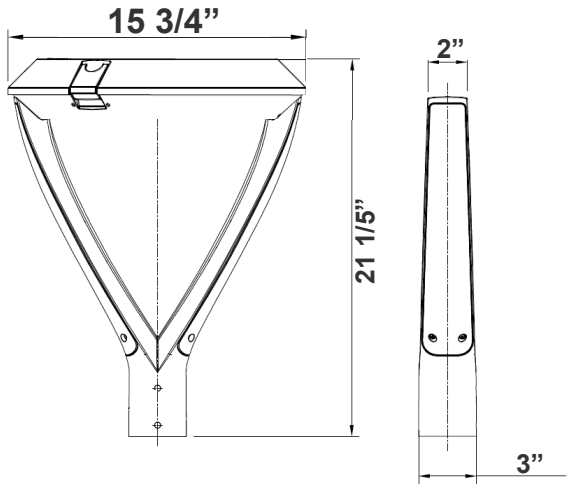

15 3/4”(D) x 21 1/5”(H) x 3”(D)

Ideal for airports, auto dealerships, corporate offices, education, government, healthcare, industrial warehouses, municipal parking, gas stations, convenient stores, recreation and public venues, restaurants, hospitality, retail and grocery stores.

Features

- Aluminum Housing ,Outdoor Powder Coated
- 7-Year Warranty
- Multi CCT and Power: Selectable Switch Inside Of The Fixture

Technical Specifications

Electrical:

- Voltage: 100-277V AC 50/60Hz
- Wattage: 18W/30W/45W/60W
- Power Factor: 0.95
- Efficacy: 150LM/W

Mechanical:

- Aluminum Housing , Outdoor Powder Coated
- Twin (Double) Arm Fits On 2-3/4” Poles
- For 2-3/8” OD Pole/Pipe
- Programmable Bi-Level Motion Sensor & Emergency Backup Options
- Operating Temperature: -86°F~122°F
- IP Rating: IP66, Suitable for Wet Locations
- 7-Year Warranty

Lighting:

- Multi CCT and Power: Selectable Switch Inside Of The Fixture
- Dimmable: 0~10V Dimming
- LED: SMD 3030
- Total Lumens: 9000LM Max.
- Color Temperature: 3000K/4000K/5000K
- Color Rendering index: >70
- Beam Angle: Type V (150° X 150°)
- Lifespan: 70000 Hrs.

Applications:

- Ideal For Garden, Amusement Park, Residential Quarter, Industrial Park And Pedestrian street.

Phone: (877) 805-2252 | Fax: (877) 805-2252
www.westgatemfg.com

Photometrics: GPX-18-60W-MCTP-A2-BK

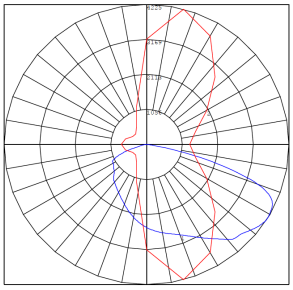

BUD Rating: B1-U1-G0

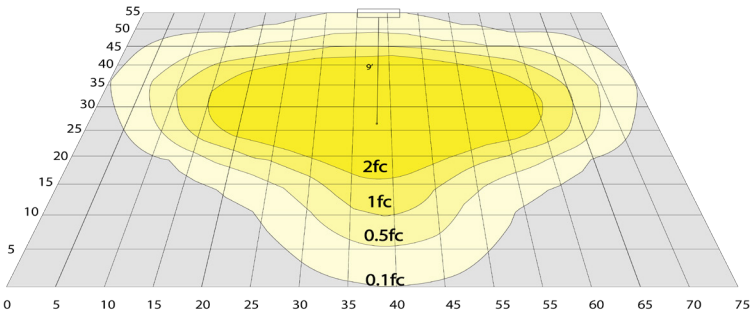

20W 5000K, Area55'x 75' Mounting Height: 9'

Other Views:



Twin Arm Mount



Lens View



Top View

Performance Table: GPX-18-60W-MCTP-A2-BK

MODEL NO.	Wattage	Voltage	Lumens	Color Temp.	BUG Rating	LPW
GPX-18-60W-MCTP-A2-BK	18W 30W 45W 60W	120-277V	2700LM 4500LM 6750LM 9000LM	3000K 4000K 5000K	B1-U1-G0	150

Sample Ordering

Model		Min. Watt		Max. Watt		Color Temp.		Mount		Finish
GPX	-	18	-	60W	-	MCTP	-	A2	-	BK

Factory Installed Options:

Blank = No Option
OPT-EM-GPX = INTERNAL EMERGENCY BACK UP BATTERY
OPT-3MPC = MICROWAVE PHOTOCELL
OPT-CLR-95(BK/GR/SR/WH) = COLOR PAINT
OPT-SEN-3MR-3 = BI-LEVEL MICROWAVE SENSOR
WEC-8RC = REMOTE CONTROL
OPT-WP-480V = 480V OPTION
OPT-GPX-LENS-TYPE2S = FACTORY- INSTALLED TYPE 2 LENS
OPT-GPX-LENS-TYPE3S = FACTORY- INSTALLED TYPE 3 LENS
OPT-GPX-LENS-FL = FACTORY- INSTALLED FROSTED GLASS LENS

FACTORY INSTALLED OPTIONS:



OPT-EM-GPX



OPT-3MPC



OPT-SEN-3MR-3

Phone: (877) 805-2252 | Fax: (877) 805-2252
www.westgatemfg.com

COLOR CHART: * Choose from one of our Premium Colors with no set-up fee.

Gloss:


SILVER METALLIC
70 GLOSS
T357-GR105


SILVER METALLIC
30 GLOSS
T353-GR06


DARK RED 90
GLOSS
P009-RD02


INTERNATIONAL
ORANGE 90
GLOSS
T009-OG26


SAFETY ORANGE
90 GLOSS
T009-OG01


YELLOW 90
GLOSS
T009-YL14


YELLOW 90
GLOSS
T009-YL01

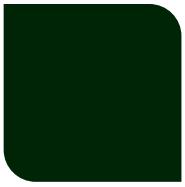
TRAFFIC GREEN
70 GLOSS
T007-GN16

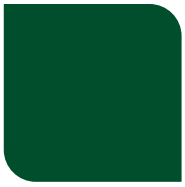
GREEN 70 GLOSS
T007-GN13


GREEN 60 GLOSS
C006-GN03


BLUE 90 GLOSS
T009-BL01


DARK BLUE 80
GLOSS
T008-BL20


RAL 8028 TERRA
BROWN 90 GLOSS
C209-BR358

Hammer:

WHITE HAMMER
T013-WH09


BEIGE HAMMER
T013-BG38


GREY HAMMER
C013-GR08


SILVER
HAMMERTONE
T064-GR05


BLACK HAMMER
T013-BK62


RED HAMMER
T013-RD15


GREEN HAMMER
T013-GN220

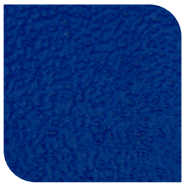
BLUE HAMMER
T013-BL468


BRONZE HAMMER
T012-BR161

Texture:

WHITE TEXTURE
C031-WH120


FLINT GRAY
TEXTURE
T243-GR522


BLACK TEXTURE
C241-BK109


RED TEXTURE
T241-RD129


BLUE TEXTURE
C241-BL544


OIL RUBBED
BRONZE TEXTURE
T291-BR251

Vein:


BLACK/WHITE
VEIN
T075-WH34


SILVER VEIN
T375-BK26


COPPER VEIN
EXTERIOR
T075-BK211


GOLD VEIN
T375-BK10


COPPER VEIN
T375-BK07