GPC SERIES Outdoor Lighting

GPC-60-100W-MCTP
GARDEN POST COACH LIGHT

WESTGATE
THE FUTURE IS HERE...AND IT'S QUITE BRIGHT!

Customer Name:

Project Name:

Note: | Type:

MCTP
SELECTION:

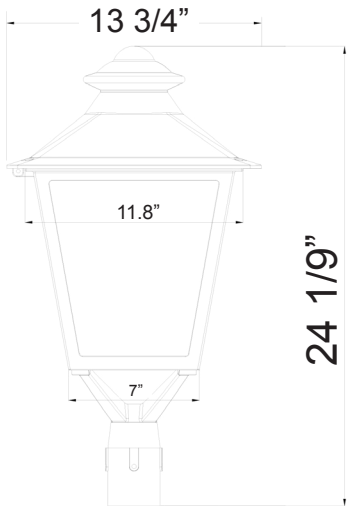

24 1/9”(H) x 13 3/4”(W)

Ideal for Residential Landscaping, Commercial Landscaping, Public Parks and Gardens, Pathway Lighting, Architectural Highlights, Hospitality and Outdoor Dining And Residential Communities.

Features

- Housing: Aluminum
- Finish: Black powder coated
- 70,000 Hours Rated Life
- 7-Year Warranty
- Multi CCT: Selectable CCTs Switch Located Under the Top Hat
- Open Sides & Bottom

Technical Specification

Electrical:

- Voltage: 120-277V AC/50~60 Hz
- Wattage: 60W/80W/100W Selectable
- Power factor: >0.9
- Efficacy: 90 LP
- THD: ≤20%

Mechanical:

- Die-cast Aluminum Housing with Powder Coat Finish
- Open Sides & Bottom
- Operating Temperature: -40°F to 104°F
- IP Rating: IP65
- Suitable for Wet Locations
- 7-Year Warranty

Lighting:

- Multi CCT: Selectable CCTs Switch Located Under the
- Top Hat
- Total Lumens: 5400LM/7200LM/9000LM
- Color Temperature: 3000K/4000K/5000K
- Color Rendering Index: ≥ 70
- 70,000 Hours Rated Life

Applications:

- Ideal for Residential Landscaping, Commercial Landscaping, Public Parks and Gardens, Pathway Lighting, Architectural Highlights, Hospitality and Outdoor Dining And Residential Communities.

DLC LISTED | ETL US | WET LOCATION | IP65

Phone: (877) 805-2252 | Fax: (877) 805-2252
www.westgatemfg.com

WG-06232022

Photometrics: GPC-60-100W-MCTP

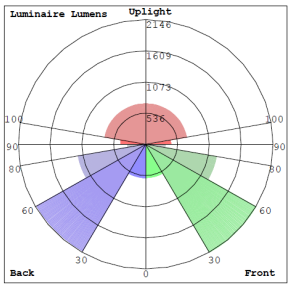

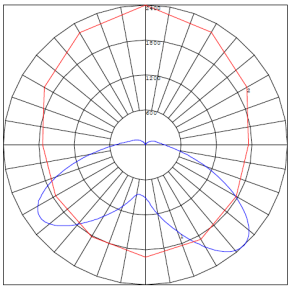

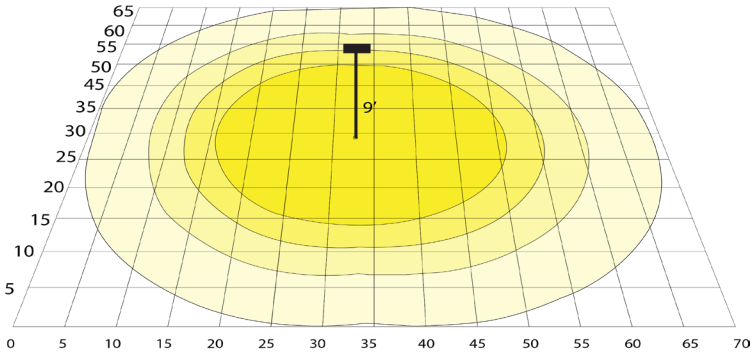

BUD Rating: B3-U4-G3

100W 5000K, Area 65'x 70' Mounting Height: 9'

Other Views:

Lens View
Power & CCT Switches

Bottom View

Performance Table: GPC-60-100W-MCTP

MODEL NO.	Wattage	Voltage	Lumens	Color Temp.	BUG Rating	LPW
GPC-60-100W-MCTP	60W 80W 100W	120V	5400LM 7200LM 9000LM	3000K 4000K 5000K	B3-U4-G3	90

Sample Ordering

Model	Min. Watt	Max. Watt	Color Temp.
GPC	60	100W	MCTP

Accessories:

Blank = No Option For Accessories
GPC-SH = GPC HOUSE-SIDE GLARE SHIELD
GPE-30-25-REDUCER=NECK REDUCER FROM 3" INNER DIAMETER TO 2.5"

Factory Installed Option:

Blank = No Option For Accessories
OPT-GPC-GSF = FACTORY-INSTALLED GLASS LENSES ON ALL 4 SIDES OF THE FIXTURE, THE BOTTOM OF THE FIXTURE IS STILL OPEN
OPT-GPC-GBF = FACTORY-INSTALLED GLASS LENS ON THE FIXTURE'S BOTTOM
OPT-GPC-PCLF = FACTORY-INSTALLED FROSTED POLYCARBONATE LENSES ON ALL 4 SIDES OF THE FIXTURE, AND BOTTOM OF THE FIXTURE
OPT-GPC-PCLC = FACTORY-INSTALLED CLEAR POLYCARBONATE LENS ON THE BOTTOM OF THE FIXTURE, AND BOTTOM OF THE FIXTURE
OPT-LF3-PCK = BUTTON
OPT-GPC-AWM = WALL MOUNT
OPT-GPC-APM = PENDANT MOUNT
OPT-SEN-3MRLV-5 = PROGRAMMABLE MICROWAVE BI-LEVEL
WEC-8RC = REMOTE CONTROL

ACCESSORIES:

GPC-SH
Shown with Shield

GPE-30-25-REDUCER
Neck Reducer from 3" Inner Diameter to 2.5"

FACTORY INSTALLED OPTION:

GPC-PCLF
Shown with Frosted Lens

OPT-LF3-PCK
Twist-Lock Photocell on Top

PML-BASE-BK
DECORATIVE PIER MOUNT BASE FOR POST TOP LIGHTS -BLACK

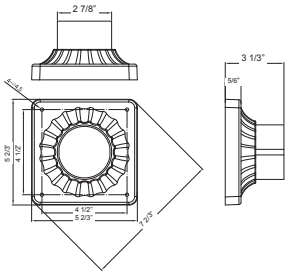

5 2/3"(H) X 5 2/3"(W) X 3 1/3"(D)

WESTGATE

Phone: (877) 805-2252 | Fax: (877) 805-2252
www.westgatemfg.com