FODL SERIES

RESIDENTIAL LIGHTING

FODL-12HL-MCTP5-DD

12" High-Lumen Dual-Lens LED Ceiling Light, Power & 5CCT Selectable, Dual Dimming



Back

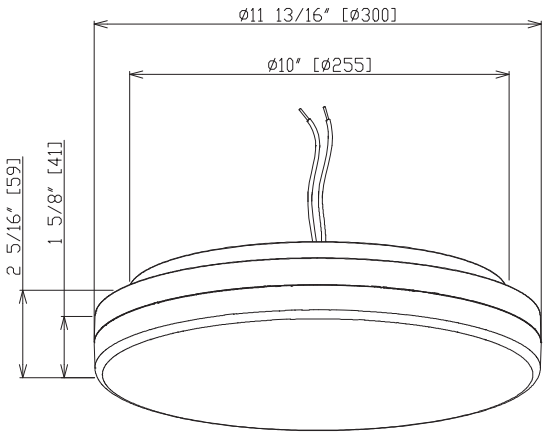

Technical Drawing: 2 5/16" (H) x 11 13/16" (W)

– The FODL-12HL-MCTP5-DD is a 12-inch high-lumen architectural LED ceiling light combining a distinctive dual-lens design with field-selectable power and color temperature. Its glass-look polymer outer lens creates an elegant decorative appearance while the 120° optical distribution provides wide, uniform illumination. Selectable 15W, 20W and 25W output, five selectable color temperatures, 90 CRI, and both 0-10V and TRIAC/ELV dimming provide exceptional application flexibility. The fixture installs directly as a low-profile surface mount or can be converted to a suspended pendant configuration using the optional FODL-SK6 kit.

Customer Name:

Project Name:

Note: | Type:

FEATURES:

– Distinctive dual-lens architectural design
– Glass-look decorative lens provides the appearance of glass with lightweight polymer construction
– High-lumen output up to 3,000 lumens
– Surface-mount or optional suspended installation
– 50,000-hour rated life
– FODL-SK6 suspension pendant kit available separately

SPECIFICATIONS:

ELECTRICAL:

– 120-277VAC, 50/60 Hz
– Selectable wattage: 15W / 20W / 25W
– 0-10V dimming at 120-277VAC
– TRIAC / ELV dimming at 120VAC
– Power factor: ≥0.90
– THD: <20%
– Operating temperature: -4°F to 104°F
– Integrated driver

MECHANICAL:

– Round surface-mount ceiling design
– PC construction
– White finish
– Dimensions: 11.81" Dia. × 2.31" H
– Fixture weight: 3.13 lbs
– Clean, low-profile backplate
– Rotating mounting structure for simplified installation
– IP54 rated
– Non-IC
– Compatible with optional FODL-SK6 pendant suspension kit

LIGHTING:

– Lumen output: 3,000 lumens max.
– 5CCT selectable: 2700K / 3000K / 3500K / 4000K / 5000K
– 90 CRI
– 120° beam angle
– 120 LM/W
– High-lumen LED performance
– Dual-lens architectural optical design
– Glass-look decorative outer lens for a refined, premium appearance
– Wide, uniform light distribution

APPLICATION:

– General indoor ceiling lighting for residential, commercial, office, retail, and hospitality spaces requiring high-lumen output, selectable CCT, and flexible dimming.

Phone/Fax: (877) 805-2252
www.westgatemfg.com

PERFORMANCE TABLE

MODEL NO.	WATTAGE	LUMEN	COLOR TEMP	LPW
FODL-12HL-MCTP5-DD	15W/20W/25W	1800LM 2400LM 3000LM	27K/30K/35K/40K/50K	120

ACCESSORIES

MODEL NO.	DESCRIPTION	IMAGE
FODL-SK6	FODL 6FT Suspension Pendant Kit	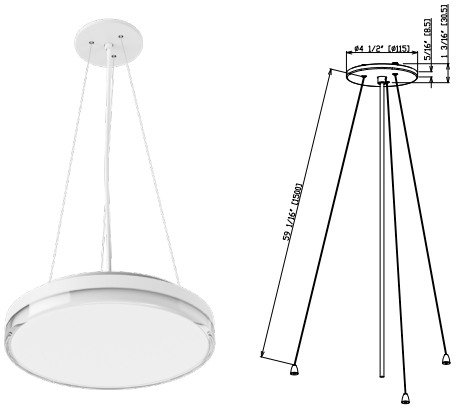
	• Converts compatible FODL fixtures to suspended pendant installation • Three-point suspension design • 59-1/16” suspension cable length • 4-1/2” diameter ceiling canopy • White finish • Metal construction • Accessory weight: 0.66 lbs • Sold separately	Technical Drawing: 59 1/16” (H) x 4 1/2” (W)

OTHER VIEWS



Night View