FLVX SERIES

OUTDOOR LIGHTING

WESTGATE
THE FUTURE IS HERE...AND IT'S QUITE BRIGHT!

FLVX-LG-30-50W-MCTP-BR
FLVX-LG-30-50W-MCTP-BK

MCTP Multi Color Temperature & Multi Power/Wattage (Selectable)

Customer Name:

Project Name:

Note: | Type:



Avail Finish:

The fixture has classic traditional appearance, professional light distribution design, 90-degree beam angle, ideal for park landscaping, garden, architectural landscape lighting, suitable for wet locations

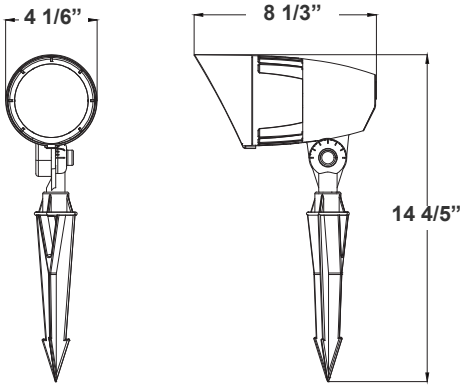

14 4/5”(H) x 4 1/6”(W) x 8 1/3”(D)

Features

- Die-cast Aluminum Housing with Powder Coat Finish (Black & Bronze)
- 1/2” Threaded Knuckle Stem
- 7-Year Warranty
- Lens Type: Plaid Tempered Glass + Aluminum Reflectors

Technical Specifications

Electrical:

- Voltage: 12V AC/DC
- Power Factor: >0.9
- Wattage: 30W/40W/50W
- Input current: 1A Max
- Efficacy: 95LPW

Lighting:

- Dimmable: Non Dimmable
- Total lumens: 4750LM Max.
- Color Temperatures: 3000K/4000K/5000K
- Color Rendering Index: CRI ≥ 80
- Beam Angle: 60°
- Lifespan: 70,000 Hrs.

Mechanical:

- Die-cast Aluminum Housing with Powder Coat Finish (Black & Bronze)
- Solid State Lighting Technology for Long Life, No Maintenance Needed and High-Efficiency
- High Conductive Aluminum LED Board
- 8-1/2” PC Spike Included
- 1/2” Threaded Knuckle Stem
- IP Rating: IP65
- Operating Temperature: -40°F to 104°F
- Suitable for Wet Locations
- Rotatable Shroud with Set Screw
- 7-Year Warranty

Applications:

- The fixture has classic traditional appearance, professional light distribution design, 90-degree beam angle, ideal for park landscaping, garden, architectural landscape lighting, suitable for wet locations

Other Models:

- 24W | 2900LM | FLVX-MD-24W-30K-BR
- 24W | 2900LM | FLVX-MD-24W-40K-BR

WET LOCATION IP65

Phone: (877) 805-2252 | Fax: (877) 805-2252
www.westgatemfg.com

Photometrics: FLVX-LG-30-50W-MCTP

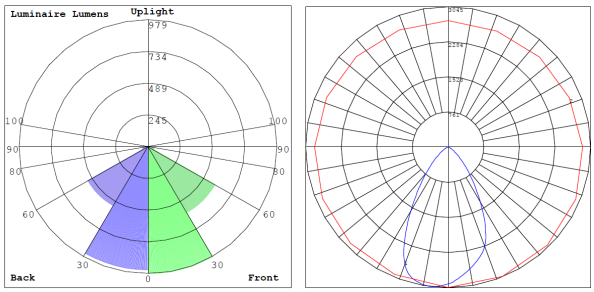

BUG Rating: B2-U0-G0

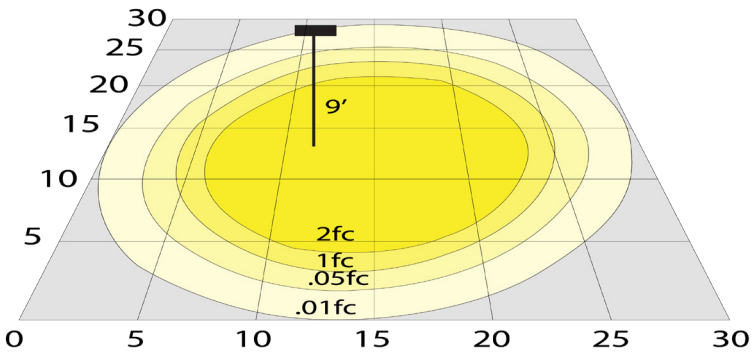

24W 3000K, Area 30'x 30' Mounting Height: 9'

Other Views:

FLVX-LG-30-50W-MCTP-BR



Side View



Front View



Back View

FLVX-LG-30-50W-MCTP-BK



Side View



Front View



Back View

Performance Table: FLVX-LG-30-50W-MCTP

MODEL NO.	Wattage	Voltage	Lumens	Color Temp.	BUG Rating	LPW
FLVX-LG-30-50W-MCTP-BK	30W 40W 50W	12V	2850LM 3800LM 4750LM	3000K 4000K 5000K	B2-U0-G0	95
FLVX-LG-30-50W-MCTP-BR						

Sample Ordering

Model	Size	Watt	Watt	Color Temp.	Finish
FLVX	LG	30	50W	MCTP	

BK = Black
BR = Bronze

Accessories:

Blank = No Option For Accessories
A-41-BR = 1/2" NPT Hub,Cast Aluminum, Bronze Powder Coat Finish
LSWN1 = Bag of 24, Waterproof Wire Connectors, For Up to Two 14-2 + One 16-2 Cables
LSWN2 = Box of 24, Waterproof Wire Connectors, For Up to Three 12-2 Cables
LSWN2-100 = Jar of 100, Waterproof Wire Connectors, For Up To Three 12-2 Cables
A-41-S = Tree Mounting Base
LG-SMB-BZ = 12V B rass Landscape Tree or Surface Bracket, Antique Bronze Finish
BC-13 = 13" Bungee Cords with Hooks
BC-18 = 18" Bungee Cords with Hooks
BC-24 = 24" Bungee Cords with Hooks
BC-32 = 32" Bungee Cords with Hooks

ACCESSORIES:



A-41-BR
1/2" NPT hub,Cast aluminum, Bronze Powder coat finish



LSWN1
Bag of 24, Waterproof wire connectors, for up to two 14-2 + one 16-2 cables



LSWN2
Box of 24, Waterproof wire connectors, for up to three 12-2 cables



LSWN2-100
Jar of 100, Waterproof wire connectors, for up to three 12-2 cables



A-41-S
Tree mounting base



LG-SMB-BZ
12V brass landscape tree or surface bracket, antique bronze finish



BC-13/18/24/32
13"/18"/24"/32" Bungee cords with hooks

WESTGATE
Phone: (877) 805-2252 | Fax: (877) 805-2252
www.westgatemfg.com