FLDX SERIES OUTDOOR LIGHTING

FLDX-MD-15W-RGBW-BT-BR

RGBW BLUETOOTH WESTGATE APP BULLET,120-277V

WESTGATE
THE FUTURE IS HERE...AND IT'S QUITE BRIGHT!

Customer Name:

Project Name:

Note: | Type:



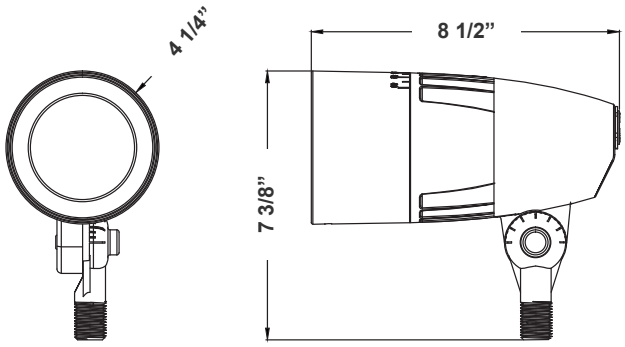

7 3/8"(H) x 8 1/2"(W) x 4 1/4"(D)

Ideal for general site lighting, alleys, loading docks, doorway, pathway, and parking areas. Great for use with motion sensors and another instant on/off controls.

Features

- Die-cast Aluminum Housing with Powder Coat Finish (Dark Bronze)
- 1/2" Threaded Knuckle Stem
- Lens Type: Plaid Tempered Glass + Aluminum Reflectors

Technical Specifications

Electrical:

- Voltage: 120-277V
- Power Factor: >0.9
- Wattage: 15W
- Efficacy: 48 LPW
- Bluetooth Connection Range: Approximately 30 feet (10 meters). Maximum Communication Range Will Vary Depending On Obstacles (Person, Metal, Wall, etc.) Or Electromagnetic Environment.

Mechanical:

- This Fixture is Bluetooth mesh Enabled. Bluetooth mesh networking enables many-to-many (m:m) device communications and is optimized for creating large-scale device networks. It is ideally suited for control monitoring and automation solutions that require tens, hundreds or thousands of devices to communicate with one another
- Die-cast Aluminum Housing with Powder Coat Finish (Dark Bronze)
- Cord type: 18" SJTW 18/3 AWG cable
- 1/2" Threaded Knuckle Stem
- Operating Temperature: -40°F to 104°F
- IP Rating: IP65
- Suitable for Wet Locations
- 7-Year Warranty

Lighting:

- Lens Type: Plaid Tempered Glass + Aluminum Reflectors
- Total Lumens: 720LM
- Color Temperatures: RGBW Selectable Through Phone App
- Color Rendering Index: CRI ≥ 80
- Beam Angle: 60°
- Lifespan: 70,000 Hrs.

Applications:

- Ideal for general site lighting, alleys, loading docks, doorway, pathway, and parking areas. Great for use with motion sensors and another instant on/off controls.

UL LISTED | WET LOCATION | IP65

Phone: (877) 805-2252 | Fax: (877) 805-2252
www.westgatemfg.com

Photometrics: FLDX-MD-15W-RGBW-BT-BR

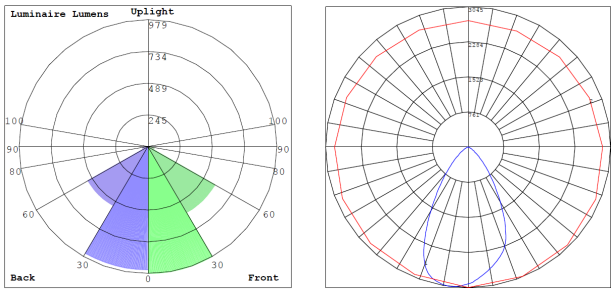

BUG Rating: B2-U0-G0

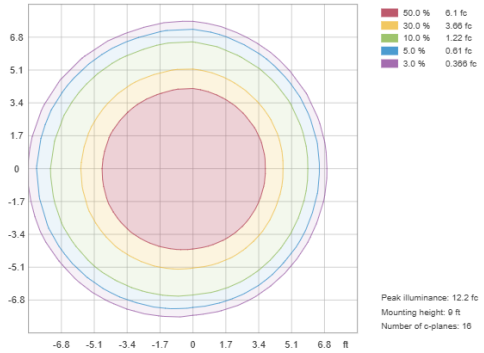

30W 3000K, Mounting Height: 9’

Other Views:



Side View



Front View



Back View

Performance Table: FLDX-MD-15W-RGBW-BT-BR

MODEL NO.	Wattage	Voltage	Lumens	Color Temp.	BUG Rating	LPW
FLDX-MD-15W-RGBW-BT-BR	15W	120-277V	720LM	RGBW	B2-U0-G0	48

Sample Ordering

Model		Size		Min. Watt		Color Temp.		Bluetooth		Finish
FLDX	-	MD	-	15	-	RGBW	-	BT	-	BR

ACCESSORY:

Blank = No Option For Accessories
FLDVX-FS-MD-BR = X-GEN BULLET REPLACEMENT FLAT SHROUD FOR MD SIZE HOUSING, BRONZE
FLDVX-MD-RL35 = X-GEN BULLET REPLACEMENT 35-DEGREE REPL. LENS FOR MD SIZE HOUSING

ACCESSORIES:



FLDVX-FS-MD-BR
X-GEN BULLET REPLACEMENT FLAT SHROUD FOR MD SIZE HOUSING, BRONZE

works with the Google Assistant

WESTGATE
Westgate Smart
Download the Smart life App
Download on the App Store
GET IT ON Google Play

WORKS WITH amazon alexa

- For Setting Up The Light(s), Initial Internet Connection or Mobile Data Is Required.
- After the Initial Setup, Internet Connection is not Necessary Anymore. The lights Can Be Controlled with The Mobile App on The Phone or Tablet. Features Such as Dimming, Changing Colors, Lights Scenes, etc.
- Scheduling Feature Requires Internet Connection.
- Bluetooth Devices Need a Gateway (Sold Separately) In Order to Connect to WiFi Network (Internet)

WESTGATE

Phone: (877) 805-2252 | Fax: (877) 805-2252
www.westgatemfg.com