FLDX SERIES OUTDOOR LIGHTING

WESTGATE
THE FUTURE IS HERE...AND IT'S QUITE BRIGHT!

FLDX-LG-10-30W-MCTP-BR
X-GEN BULLET FLOOD LIGHTS

Customer Name:
Project Name:
Note: | Type:



MCTP Selection:

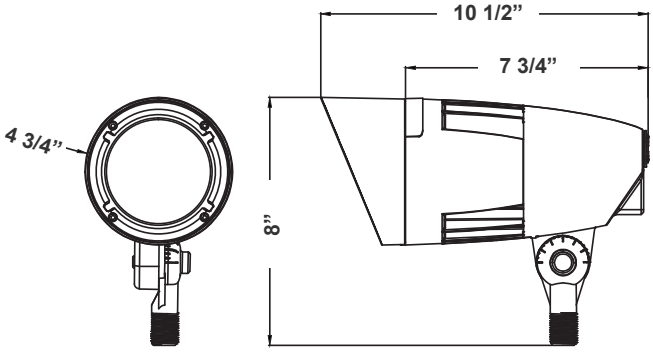

Ideal for general site lighting, alleys, loading docks, doorway, pathway, and parking areas. Great for use with motion sensors and another instant on/off controls.

8”(H) x 10 1/2”(W) x 4 3/4”(D)

Features

- Die-cast Aluminum Housing with Powder Coat Finish (Dark Bronze)
- 1/2” Threaded Knuckle Stem
- MCTP: Multi CCP and Power switches on the back of the fixture
- 7-Year Warranty
- Lens Type: Plaid Tempered Glass + Aluminum Reflectors

Technical Specifications

Electrical:

- Voltage: 120-277V
- Power Factor: >0.9
- Wattage: 10W/20W/30W
- Efficacy: 120 LPW

Mechanical:

- Die-cast Aluminum Housing with Powder Coat Finish (Dark Bronze)
- Cord type: 18” SJTW 18/3 AWG cable
- 1/2” Threaded Knuckle Stem
- Operating Temperature: -40°F to 104°F
- IP Rating: IP65
- Suitable for Wet Locations
- 7-Year Warranty

Lighting:

- MCTP: Multi CCP and Power switches on the back of the fixture
- Lens Type: Plaid Tempered Glass + Aluminum Reflectors
- Total Lumens: 3600LM
- Color Temperatures: 3000K/4000K/5000K
- Color Rendering Index: CRI ≥ 80
- Beam Angle: 60°
- Lifespan: 70,000 Hrs.

Applications:

- Ideal for general site lighting, alleys, loading docks, doorway, pathway, and parking areas. Great for use with motion sensors and another instant on/off controls.

Other Models:

- 30W | 3600LM | FLDX-LG-10-30W-MCTP-BK

UL LISTED · WET LOCATION · IP65 · 7 YEAR LIMITED WARRANTY

Phone: (877) 805-2252 | Fax: (877) 805-2252
www.westgatemfg.com

Photometrics: FLDX-LG-10-30W-MCTP-BR

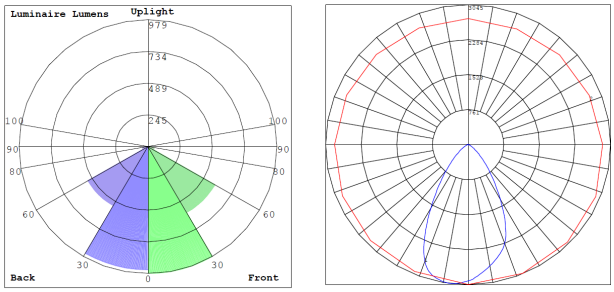

BUG Rating: B2-U0-G0

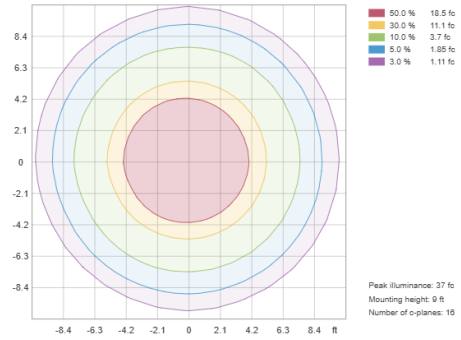

30W 3000K, Mounting Height: 9’

Other Views:



Side View



Front View



Back View

Performance Table: FLDX-LG-10-30W-MCTP-BR

MODEL NO.	Wa age	Voltage	Lumens	Color Temp.	BUG Ratin	LPW
FLDX-LG-10-30W-MCTP-BR	10W 20W 30W	120-277V	1200LM 2400LM 3600LM	3000K 4000K 5000K	B2-U0-G0	120

Sample Ordering

Model		Size		Min. Watt		Max.Watt		Color Temp.		Finish
FLDX	-	LG	-	10	-	30W	-	MCTP	-	BR

ACCESSORY:

Blank = No Option For Accessories
FLDVX-FS-LG-BR = X-GEN BULLET REPLACEMENT FLAT SHROUD FOR LG SIZE HOUSING, BRONZE
FLDVX-LG-RL60 = X-GEN BULLET REPLACEMENT 60-DEGREE REPL. LENS FOR LG SIZE HOUSING

ACCESSORIES:



FLDVX-FS-LG-BR
X-GEN BULLET REPLACEMENT FLAT SHROUD FOR LG SIZE HOUSING, BRONZE

Example:

1. **FLDX-LG-10-30W-MCTP-BR** (FOR FLDX 30W MCTP FIXTURE 120-277V)

2. **FLDX-LG-10-30W-MCTP-BR** (FOR FLDX 30W MCTP FIXTURE 120-277V)
   FLDVX-FS-LG-BR (X-GEN BULLET REPLACEMENT FLAT SHROUD FOR LG SIZE HOUSING, BRONZE)

WESTGATE
Phone: (877) 805-2252 | Fax: (877) 805-2252
www.westgatemfg.com