FDL SERIES Residential Lighting

WESTGATE
THE FUTURE IS HERE...AND IT'S QUITE BRIGHT!

FDL-16-MCT



Selection:

MULTI-CCT

Customer Name:

Project Name:

Note: | Type:

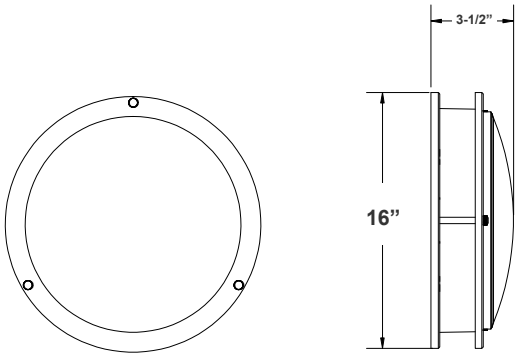

16" (W) x 3-1/2" (H)

The LED Flush Mount Surface Fixture is a low profile downlight intended for ceiling or wall mount applications. Driver on Board (DOB) technology, with no driver or transformer needed. These flush mount ceiling lights mount directly to a 4" & 3" deep dish junction boxes ideal for Residential and commercial applications

Features

- Construction: Spun Aluminum + Steel (Brushed Nickel Finish)
- Optics: White Translucent Acrylic Lens
- 5-Year Warranty
- 50,000 Hours Rated Life
- MCT: Multi Color Temperature (Selectable with Switch Inside Fixture)
- High Lumens

Technical Specifications

Electrical:

- Voltage: 120V AC
- Wattage: 25W
- Power Factor: >0.9
- Efficacy: 76 LPW

Mechanical:

- Optics: White Translucent Acrylic Lens
- Construction: Spun aluminum Steel (Brushed Nickel Finish)
- Gasket: Closed Cell Neoprene Foam Gasket
- Operating Temp: -4ºF~104ºF
- Suitable for Damp Locations When Gasket is Used

Lighting:

- Dimmable Down to 10% Using a Standard TRIAC LED Dimmer
- Total Lumens: 1900LM
- Color Temperatures: 3000K/4000K/5000K
- Multi-CCT (selectable with switch is on the LED Board Under the Lens)
- Color Rendering Index: CRI ≥ 80
- IP Rating: IP20

Applications:

- The LED Flush Mount Surface Fixture is a low profile down light intended for ceiling or wall mount applications. Driver on Board (DOB) technology, with no driver or transformer needed. These flush mount ceiling lights mount directly to a 4" deep dish junction box ideal for Residential and commercial applications

Other Models:

- 15W | 1000LM | FDL-12-MCT
- 20W | 1400LM | FDL-14-MCT
- 30W | 2200LM | FDL-18-MCT

Phone: (877) 805-2252 | Fax: (877) 805-2252
www.westgatemfg.com | www.westgatecontrols.co

WG-Z6-Z9-2Z

Photometrics: FDL-16-MCT

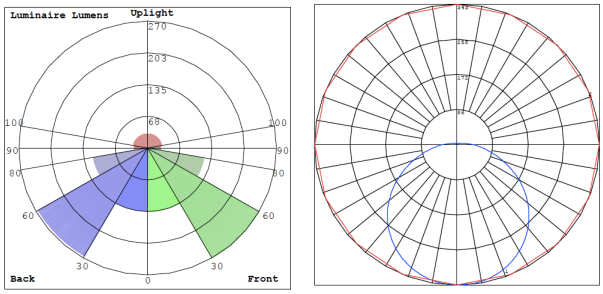

BUD Rating: B1-U2-G1

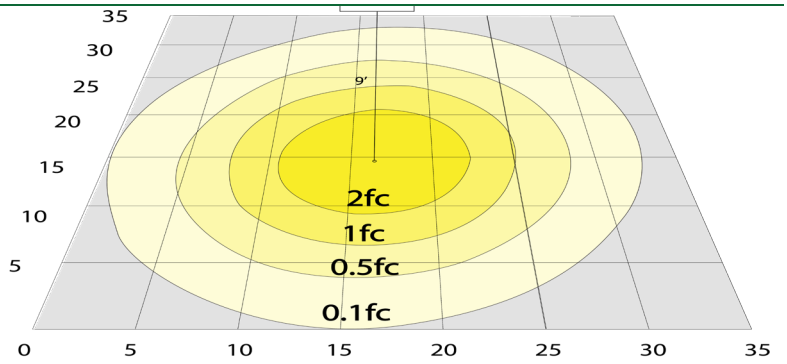

Area 35'x 35' Mounting Height: 9'

Other Views:



Side View



Front View



Back View

Performance Table: FDL-16-MCT

MODEL NO.	Wattage	Voltage	Lumens	Color Temp.	BUG Rating	LPW
FDL-16-MCT	25W	120V	1900	3000K 4000K 5000K	B1-U2-G1	76

Sample Ordering

Model	Size	Color Temp.
FDL	16	MCT

Factory-Installed Options:

Blank = No Option For Accessories
OPT-SEN-2US= ULTRASONIC BI-LEVEL DIMMING (REMOTE NOT NEEDED)
WEC-3RC= OPTIONAL REMOTE CONTROL
OPT-PC-FM= BOTTOM PHOTOCELL WITH AUXILIARY (EXTENDED) BASE

FACTORY-INSTALLED OPTIONS:



WEC-3RC



OPT-SEN-2US

Example:

1. **FDL-16-MCT** (FOR FDL 25W MCT FIXTURE 120V)
2. **FDL-16-MCT** (FOR FDL 25W MCT FIXTURE 120V)
   OPT-SEN-2US (ULTRASONIC BI-LEVEL DIMMING (REMOTE NOT NEEDED)