FDL SERIES Residential Lighting

WESTGATE
THE FUTURE IS HERE...AND IT'S QUITE BRIGHT!

FDL-14-MCT5
LED 5CCT DOUBLE RING FLUSH MOUNT
MCT5 Multi Color Temperature (Selectable)

Customer Name:
Project Name:
Note: | Type:



Finishes:

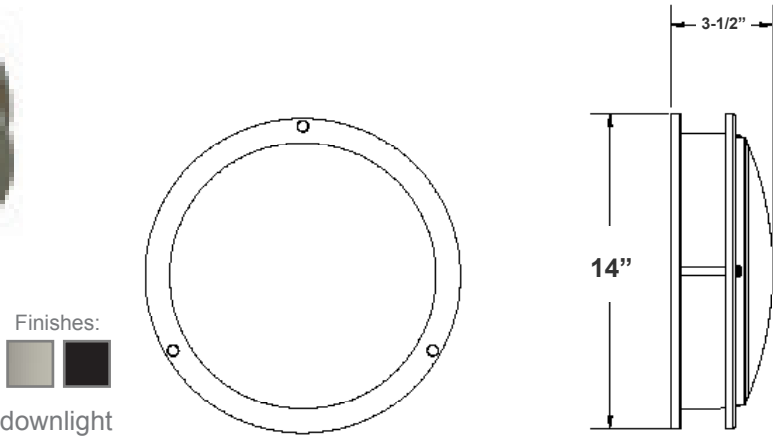

14" (W) x 3-1/2" (H)

The LED Flush Mount Surface Fixture is a low profile downlight intended for ceiling or wall mount applications. Driver on Board (DOB) technology, with no driver or transformer needed. These flush mount ceiling lights mount directly to a 4" & 3" deep dish junction boxes ideal for Residential and commercial applications

Features

- Construction: Spun Aluminum + Steel (Brushed Nickel Finish)
- Optics: White Translucent Acrylic Lens
- 5-Year Warranty
- 50,000 Hours Rated Life
- MCT5: Multi Color Temperature (Selectable with Switch Inside Fixture)
- High Lumens

Technical Specifications

Electrical:

- Voltage: 120V AC
- Wattage: 20W
- Power Factor: >0.9
- Efficacy: 75 LPW

Mechanical:

- Optics: White Translucent Acrylic Lens
- Construction: Spun aluminum Steel (Brushed Nickel Finish)
- Gasket: Closed Cell Neoprene Foam Gasket
- Operating Temp: -4ºF~104ºF
- Suitable for Damp Locations When Gasket is Used

Lighting:

- Multi-CCT (selectable With Switch Is On The LED Board Under The Lens)
- Dimmable Down to 10% Using a Standard TRIAC LED Dimmer
- Total Lumens: 1500LM
- Color Temperatures: 2700K/3000K/3500K/4000K/5000K
- Color Rendering Index: CRI ≥ 80
- IP Rating: IP20

Applications:

- The LED Flush Mount Surface Fixture is a low profile down light intended for ceiling or wall mount applications. Driver on Board (DOB) technology, with no driver or transformer needed. These flush mount ceiling lights mount directly to a 4" deep dish junction box ideal for Residential and commercial applications

Phone: (877) 805-2252 | Fax: (877) 805-2252
www.westgatemfg.com | www.westgatecontrols.co

WG-Z6-Z9-2Z

Photometrics: FDL-14-MCT5

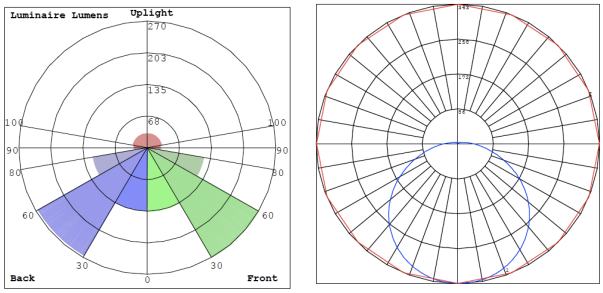

BUD Rating: B1-U2-G1

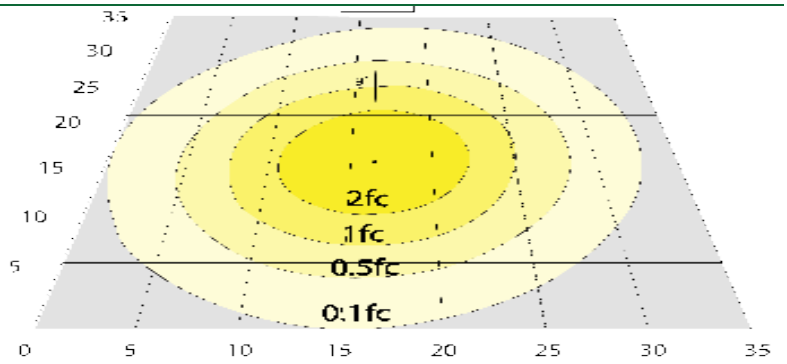

Area 35'x 35' Mounting Height: 9'

Other Views:



Side View



Front View



Back View

Performance Table: FDL-14-MCT5

MODEL NO.	Wattage	Voltage	Lumens	Color Temp.	BUG Rating	LPW
FDL-14-MCT5	20W	120V	1500LM	2700K 3000K 3500K 4000K 5000K	B1-U2-G1	75

Sample Ordering

Model	Size	Color Temp.
FDL	14	MCT5

Accessory:

Blank = No Option For Accessories
FDL-SFK = SEMI-FLUSH ACCESSORY KIT FOR FDL FLUSH-MOUNT SERIES

Factory-Installed Options:

Blank = No Option For Accessories
OPT-FDL-14-EM = EMERGENCY BACKUP BATTERY MOUNT IN EXTENDED BASE
OPT-EM-FDL-14 = MOUNT IN EXTENDED
OPT-277V-FDL-14 = EXTERNAL BOX
OPT-SEN-NLS-2US = WG NETWORK SENSOR
OPT-SEN-2US = ULTRASONIC BI-LEVEL DIMMING (REMOTE NOT NEEDED)
OPT-SEN-KEILTON-2US = KEILTON NETWORK SENSOR
WEC-3RC = REMOTE CONTROL
OPT-PC-FM = BUTTON WITH AUXILIARY

ACCESSORIES:

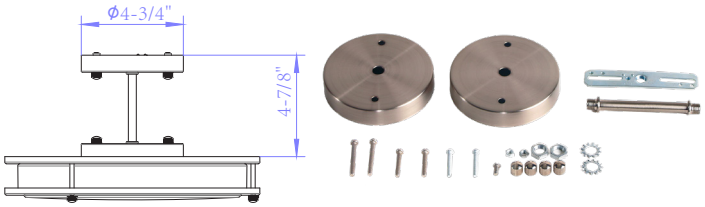

FDL-SFK

FACTORY-INSTALLED OPTIONS:



OPT-FDL-14-EM



OPT-SEN-2US



WEC-3RC

Phone: (877) 805-2252 | Fax: (877) 805-2252
www.westgatemfg.com | www.westgatecontrols.co