DLS SERIES

Residential Lighting

WESTGATE
THE FUTURE IS HERE...AND IT'S QUITE BRIGHT!

DLU6-MCT5
DLU6-MCT5-BK

6" ECO METAL DISK LIGHT - 120V
MCT Multi Color Temperature (Selectable)

Customer Name:
Project Name:
Note: | Type:



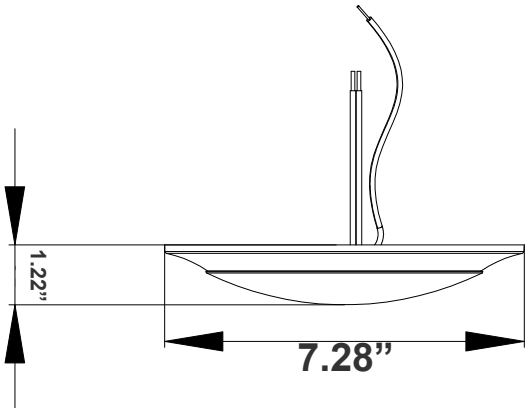

7.28"(D) x 1.22"(W)

Disk lights have been designed to be a flexible lighting solution for retrofit and new construction applications, Ideal for closets, storage areas, attics, corridors, or general lighting solutions for residential and commercial applications.

Features

- Spun Steel, Powder-Coated
- Unique DOB (Driver On Board) LED Board Enclosed in Clear PC Cover for Better Damp Location Performance
- MCT: The Switch is On The LED Board Under The Lens
- White Translucent Acrylic Lens

Technical Specifications

Electrical:

- Voltage: 120V AC
- Power Factor: >0.90
- Wattage: 12W
- Efficacy: 83 LPW and 75 LPW

Mechanical:

- White and Black Finish
- Metal Housing
- Fits on 4" Octagonal (4O) or 3" Octagonal (3O) Electrical Boxes
- Maximum Ambient Temperature: -4°F to 104°F
- Suitable for Damp Location
- 5-Year Warranty

Lighting:

- Lens: White Translucent Acrylic
- MCT: The Switch is On The LED Board Under The Lens
- LED: Unique DOB (Driver On Board) LED Board Enclosed in Clear PC Cover for Better Damp Location Performance
- Dimming: TRIAC Dimming (Using Standard TRIAC
- LED Dimmers)
- Total Lumens: White:1000LM/Black:900LM
- Color Temperatures: 2700K/3000K/3500K/4000K/5000K
- Color Rendering Index: CRI ≥ 80
- Rated life: 50,000 hrs
- Beam Angle: 120°

Applications:

- Disk lights have been designed to be a flexible lighting solution for retrofit and new construction applications, Ideal for closets,storage areas, attics, corridors, or general lighting solutions for residential and commercial applications

Phone: (877) 805-2252 | Fax: (877) 805-2252
www.westgatemfg.com

Photometrics: DLSU6-MCT5

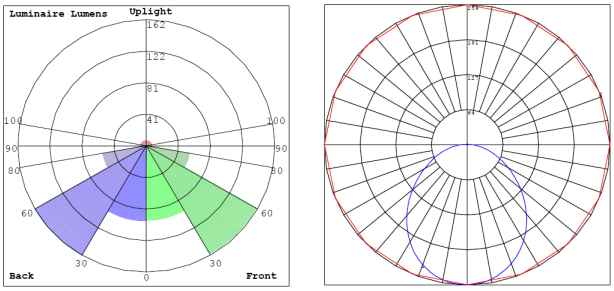

BUG Rating: B0-U1-G0

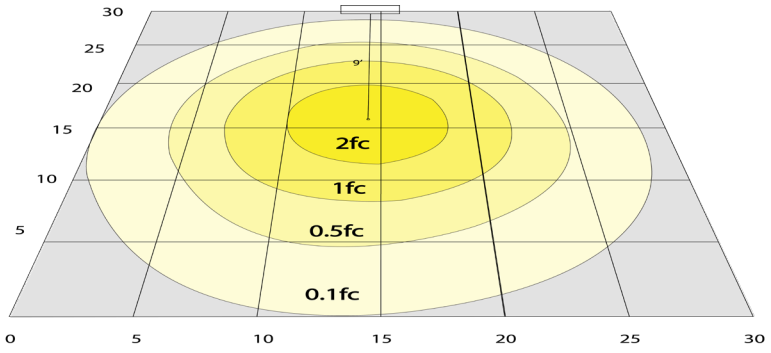

5000K, Area 30'x 30' Mounting Height: 9'

Other Views:

DLSU6-MCT5

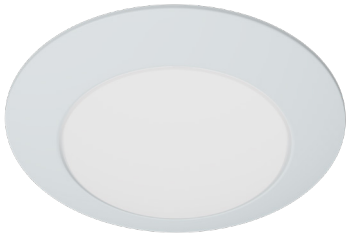

Side View

Front View

DLSU6-MCT5-BK

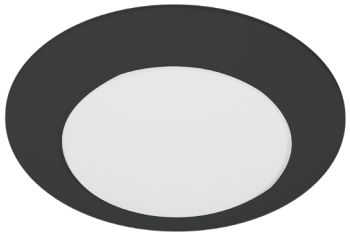

Side View

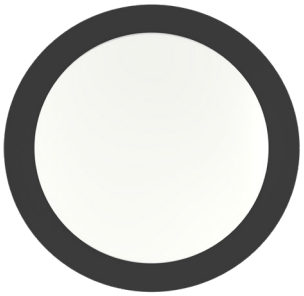

Front View

Performance Table: DLU6-MCT5

MODEL NO.	Wattage	Voltage	Lumens	Color Temp.	BUG Rating	LPW
DLU6-MCT5 DLU6-MCT5-BK	12W	120V	1000LM 900LM	2700K 3000K 3500K 4000K 5000K	B0-U1-G0	86 75

Sample Ordering

Model		Color Temp.		Finish
DLU6	-	MCT5	-	

Blank = White
BK = Black

Factory-Installed Options:

Blank = No Option For Accessories
OPT-EM-DLS6 = EMERGENCY OPTION - MOUNT IN EXTENDED BASE
OPT-PC-DLS6 = PHOTOCELL

FACTORY-INSTALLED OPTION:



OPT-EM-DLS6