DLS SERIES Residential Lighting

WESTGATE
THE FUTURE IS HERE...AND IT'S QUITE BRIGHT!

DLS10-MCT

Customer Name:

Project Name:

Note: | Type:



Selection:

MULTI-CCT

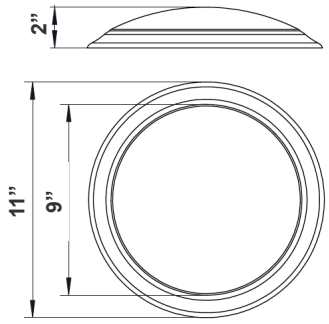

11" x 2"

Disk lights have been designed to be a flexible lighting solution for retrofit and new construction applications, Ideal for closets, storage areas, attics, corridors, or general lighting solutions for residential and commercial applications.

Features

- Die-cast Aluminum. Powder-Coated
- Unique DOB (Driver On Board) LED Board Enclosed in Clear PC Cover for Better Wet Location Performance
- Closed Cell Neoprene Foam Gasket
- Multi CCT (Selectable Switch on LED Board Under the Lens)

Technical Specifications

Electrical:

- Voltage: 120V AC
- Power Factor: >0.90
- Wattage: 25W
- Efficacy: 70 LPW

Mechanical:

- White Finish
- Die-cast Aluminum. Powder-Coated
- Gasket: Closed Cell Neoprene Foam Gasket
- Fits on 4"Octagonal (4O) or 3"Octagonal (3O) Electrical Boxes
- Recessed Mounting Kit Included for Recessed/Retrofit Installation
- Maximum Ambient Temperature: 104°F
- 5-Year Warranty

Lighting:

- Lens: White Translucent Acrylic
- LED: Unique DOB (Driver On Board) LED Board Enclosed in Clear PC Cover for Better Wet Location Performance
- Dimming: TRIAC Dimming (Using Standard TRIAC
- LED Dimmers)
- Total Lumens: 1750LM
- Color Temperatures: 3000K/ 4000K/ 5000K
- Multi CCT (Selectable Switch on LED Board Under the Lens)
- Color Rendering Index: CRI ≥ 90
- Rated life: 50,000 hrs

Applications:

- Disk lights have been designed to be a flexible lighting solution for retrofit and new construction applications, Ideal for closets,storage areas, attics, corridors, or general lighting solutions for residential and commercial applications

Other Models:

• 9W | 540LM | DLS4-MCT • 15W | 1000LM | DLS6-MCT • 20W | 1200LM | DLS8-MCT • 30W | 1800LM | DLS12-MCT

ENERGY STAR WET LOCATION DIMMING 5 YEAR

Phone: (877) 805-2252 | Fax: (877) 805-2252
www.westgatemfg.com | www.westgatecontrols.co

WG-Z7-Z6-2Z

Photometrics: DLS10-MCT

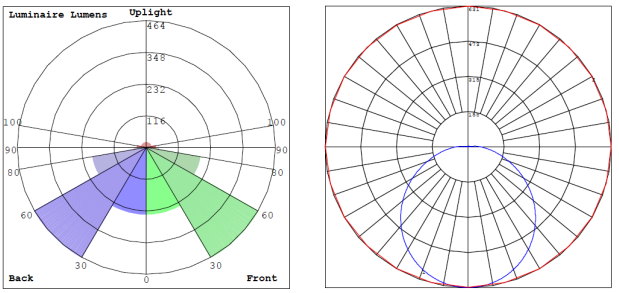

BUG Rating: B1-U2-G1

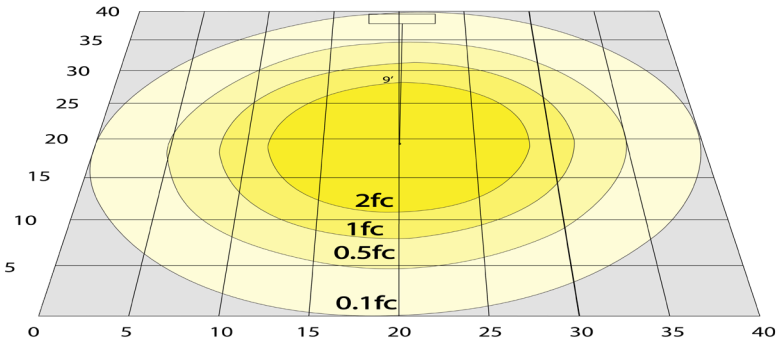

Simulation Based on 4000K Area 40'x 40' Mounting Height: 9'

Other Views:



Side View

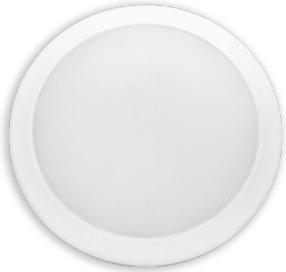

Front View



Back View

Performance Table: DLS10-MCT

MODEL NO.	Wattage	Voltage	Lumens	Color Temp.	BUG Rating	LPW
DLS10-MCT	25W	120V	1750LM	3000K/ 4000K/ 5000K	B1-U2-G1	70

Sample Ordering

Model **Color Temp.**

DLS10 - MCT

Factory-Installed Options:

Blank = No Option For Accessories
OPT-EM-DLS10 = MOUNT IN EXTENDED BASE

Example:

1. **DLS10-MCT** (FOR DLS10 25W FIXTURE 120V)

2. **DLS10-MCT** (FOR DLS10 25W FIXTURE 120V)
   OPT-EM-DLS10 (MOUNT IN EXTENDED BASE)

MOUNTING KIT and OPTION:



Recessed Mounting Kit included



OPT-EM-DLS10

Other Model:



DLS10-MCT-PIR
with PIR Motion Sensor