CXU SERIES

OUTDOOR LIGHTING

WESTGATE
THE FUTURE IS HERE...AND IT'S QUITE BRIGHT!

CXU-30-100W-MCTP-SR-SIL

X-GEN GARAGE LIGHT WITH UPLIGHT, POWER AND CCT ADJUSTABLE, SENSOR READY

MCTP Multi Color Temperature & Multi Power/Wattage (Selectable)



Ideal for indoor parking lost, commercial buildings, schools, warehouse, retail centers, apartment, complexes.

Customer Name:

Project Name:

Note: | Type:

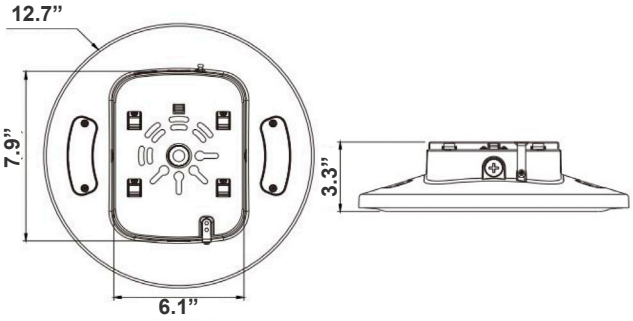

12.7”(D) x 3.3”(H)

Features

- Twist-Lock Zhaga Socket Pre-Installed. See Motion Sensor Accessories
- Factory- Installed Options: Motion Sensor
- 7-year warranty

Technical Specifications

Electrical:

- Input Wattage: 30W/50/75w/100W
- Input Current: 0.6A MAX
- Input Voltage: 120-277VAC 50/60Hz
- Power Factor: >0.90
- LPW: 165

Lighting:

- Dimming: 0~10V Dimmable
- Total Lumens: 16500LM Max.
- Color Temperature: 3000K/4000K/ 5000K
- Color Rendering index: >80
- Beam Angle: 150°
- Lifespan: 70000 Hrs

Mechanical:

- Die-cast Aluminum - Silver Finish
- 3/4” Threaded Hub Located On Top For Stem Mounting
- Integrated Uplight, UP: 10% DOWN: 90%
- Twist-Lock Zhaga Socket Pre-Installed. See Motion Sensor Accessories
- Prismatic Polycarbonate Lens
- Operating Temperature: -40°F ~ 131°F
- IP Rating: IP65, Wet Locations
- 7-year Warranty

Applications:

- Indoor Parking
- Commercial Buildings
- School
- Warehouses
- Complexes
- Apartment
- Garage

Other Models:

- 60W | 9900LM | CXU-18-60W-MCTP-SR

ETL US | WET LOCATION | IP65 | DIMMING 1-10V | 7

Phone: (877) 805-2252 | Fax: (877) 805-2252
www.westgatemfg.com

Photometrics: CXU-30-100W-MCTP-SR-SIL

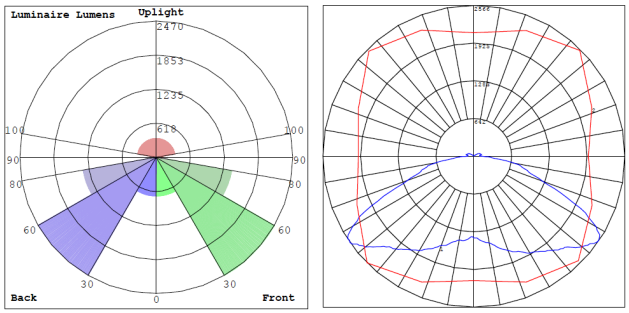

BUD Rating: B3-U3-G2

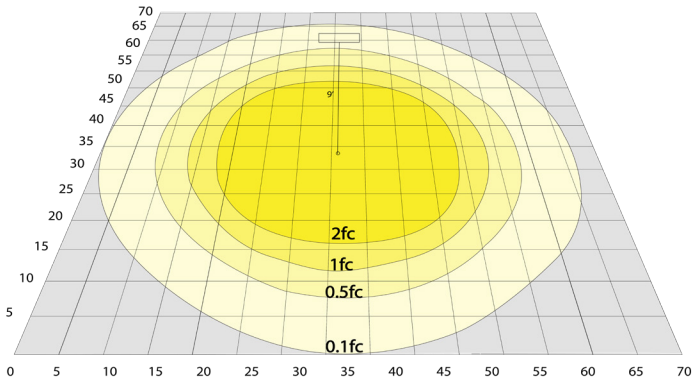

5000K Area 70'x 70' Mounting Height: 9'

Other Views:

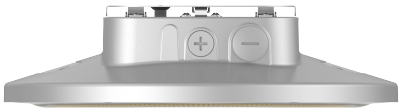

Side View



Front View



Back View

Performance Table: CXU-30-100W-MCTP-SR-SIL

MODEL NO.	Wattage	Voltage	Lumens	Color Temp.	BUG Rating	LPW
CXU-30-100W-MCTP-SR-SIL	30W 50W 75W 100W	120~277V	4950LM 8250LM 12375LM 16500LM	3000K 4000K 5000K	B3-U3-G2	165

Sample Ordering

Model		Wattage		Color Temp.	Sensor	Finish
CXU	-	30-100W	-	MCTP	- SR	SIL

Accessories

Blank = No Option For Factory-Installed
WEC-3PR-72-TLB-WH = SENSOR-READY PLUG & PLAY FOR CXU ONLY
WEC-3PR-72-MR-BK = SENSOR-READY PLUG & PLAY FOR CXU ONLY
WEC-3PR-72-MBT-BK = SENSOR-READY PLUG & PLAY FOR CXU ONLY
WEC-3RC= REMOTE CONTROL FOR THE MOTION SENSOR

Factory Installed Options

Blank = No Option For Factory-Installed
OPT-SEN-2MD-35 = PROGRAMMABLE MICROWAVE BI-LEVEL SENSOR
OPT-CLR-95(BK/GR/SR/WH) = COLOR PAINTS
OPT-PC-B = BUTTON PHOTOCELL
OPT-TRS-T20 = TAMPER RESISTANT SCREW
GPC-GBF-KIT = ONE-SIDE FROSTED GLASS LENS KIT
GPC-GSF-KIT = 4-SIDE FROSTED GLASS LENS KIT
GPC-PCLC = CLEAR PC LENS - NEEDS PRO INSTALLATION
GPC-PCLF = FROSTED PC LENS - NEEDS PRO INSTALLATION

SENSOR AND REMOTE CONTROL OPTIONS



WEC-3RC



WEC-3PR-72-TLB-WH



WEC-3PR-72-MR-BK
WEC-3PR-72-MBT-BK

WESTGATE
Phone: (877) 805-2252 | Fax: (877) 805-2252
www.westgatemfg.com