WESTGATE
THE FUTURE IS HERE...AND IT'S QUITE BRIGHT!

JOB NAME: _____

DATE: _____

TYPE: _____





CWLEZXTE1GW **CWLEZXTE2GW**
CWLEZXTE1GG **CWLEZXTE2GG**
CWLEZXTE1GB **CWLEZXTE2GB**
CWLEZXTE1RW **CWLEZXTE2RW**
CWLEZXTE1RG **CWLEZXTE2RG**
CWLEZXTE1RB **CWLEZXTE2RB**

WET LOCATION LED EXIT SIGN & LED EMERGENCY

ELECTRICAL SPECIFICATIONS:

- Voltage: Dual 120-277V
- Wattage: 3.6W

HOUSING SPECIFICATIONS:

- High-impact die-cast aluminum LED exit and emergency light
- Adjustable LED lamp heads provide optimal center-to-center spacing
- EZ snap-out left or right arrow knock outs
- Universal exit: single or double face — wall (back) or ceiling mount
- Mounting accessories included
- Low profile compact design, available in white or black housing
- Operation Temperature: 68˚~122˚F
- Suitable for damp location

CERTIFICATIONS: UL

UL LISTED

WET location

3 YEAR WARRANTY

DIMENSIONS:

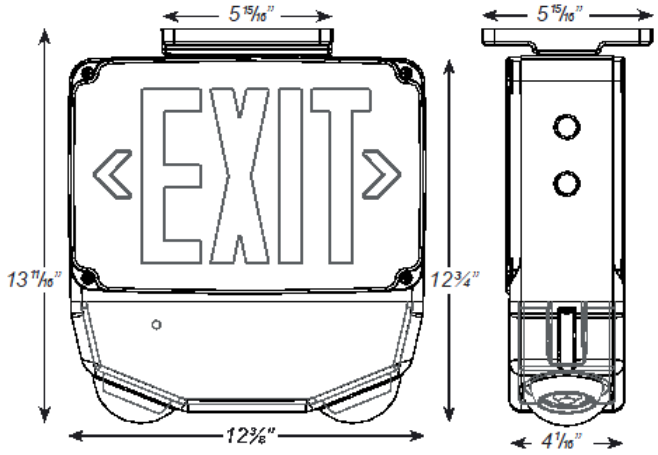

MODEL	VOLTAGE	NUMBER OF FACEPLATES	FACEPLATE	BATTERY	LETTERS COLOR
CWLEZXTE1GW	Dual 120-277V	Single	White	Ni-Cad	Green
CWLEZXTE1GG	Dual 120-277V	Single	Gray	Ni-Cad	Green
CWLEZXTE1GB	Dual 120-277V	Single	Black	Ni-Cad	Green
CWLEZXTE1RW	Dual 120-277V	Single	White	Ni-Cad	Red
CWLEZXTE1RG	Dual 120-277V	Single	Gray	Ni-Cad	Red
CWLEZXTE1RB	Dual 120-277V	Single	Black	Ni-Cad	Red
CWLEZXTE2GW	Dual 120-277V	Double	White	Ni-Cad	Green
CWLEZXTE2GG	Dual 120-277V	Double	Gray	Ni-Cad	Green
CWLEZXTE2GB	Dual 120-277V	Double	Black	Ni-Cad	Green
CWLEZXTE2RW	Dual 120-277V	Double	White	Ni-Cad	Red
CWLEZXTE2RG	Dual 120-277V	Double	Gray	Ni-Cad	Red
CWLEZXTE2RB	Dual 120-277V	Double	Black	Ni-Cad	Red

TECHNICAL SPECIFICATIONS:

- Even illumination across the face without LED imaging
- Optional self diagnostics test
- Solid state electronics and charger board
- Push-to-test switch
- 90 min rate with push style test switch and red indicator light
- Specification grade exit with Premium high-output ultra bright LEDs

WARRANTY: 3 years

- Meets UL924, NFPA life safety code, Local and State codes, NEC,OSHA

Rev. 2020-02-11

WESTGATE MFG., INC. • Phone (877) 805-2252 • Fax (877) 809-2252