CRLX SERIES COMMERCIAL INDOOR LIGHTING

WESTGATE
THE FUTURE IS HERE...AND IT'S QUITE BRIGHT!

CRLX8-18-40W-MCTP-D
X GEN. LED COMMERCIAL RECESSED LIGHT
MCTP Multi Color Temperature & Multi Power/Wattage (Selectable)

Customer Name:
Project Name:
Note: | Type:



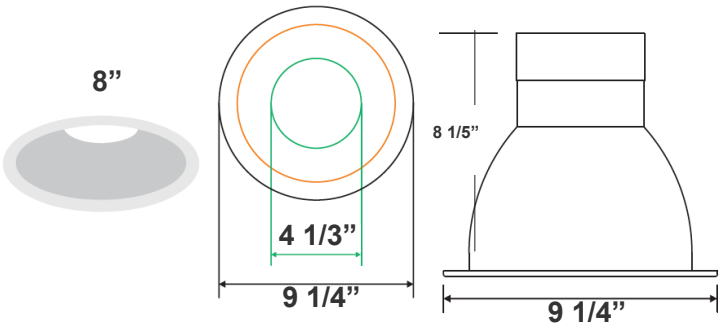

Ideal for hotel, offices, retail outlets, restaurant, parking garages, conference room, education facilities and more.

8 1/5”(H) X 9 1/4” (W)
Mounting Diameters: 7.7”- 8.4”

Features

- 8” Haze Finish TRIM
- MCTP: The switch is on the light engine
- Mounting Options: Recessed
- 5-Year Warranty
- Lifespan: 50,000 hrs.

Technical Specifications

Electrical:

- Voltage: 120-277VAC 50/60Hz
- Wattage: 18W/27W/40W
- Power factor: >0.90
- Efficacy: 85 LPW

Mechanical:

- 8” Haze Finish TRIM
- Mounting Options: Recessed
- Temperature Rating: Designed to operate in temperatures 113°F
- No IC-Rated
- Suitable for Damp Locations
- 5-Year Warranty

Lighting:

- MCTP: The switch is on the light engine
- Dimming: 1~10V Dimmable
- Total lumens: 3400LM Max.
- Color temperature: 3000K/3500K/4000K
- Color rendering index: >80
- Lifespan: 50,000 hrs.

Applications:

- Ideal for hotel, offices, retail outlets, restaurant, parking garages, conference room, education facilities and more.

Other Models:

- 80W | 6800LM | CRLX8-50-80W-MP

Phone: (877) 805-2252 | Fax: (877) 805-2252
www.westgatemfg.com

Other Views:



CRLX-EGN-18-40W-MCTP
Light Engine

+



CRLX-TRM-8
Trim

=



CRLX8-18-40W-MCTP
Complete Unite

Performance Table: CRLX8-18-40W-MCTP-D

MODEL NO.	Wattage	Voltage	Lumens	Color Temp.	BUG Rating	LPW
CRLX8-18-40W-MCTP-D	18W	120-277V	2160LM	3000K 3500K 4000K	B1-U1-G0	85
	27W		2720LM			
	40W		3200LM			

Sample Ordering

Model		Watt		Watt		Color Temp.
CRLX8	-	18	-	40W	-	MCTP

Factory-Installed Option:

Blank = No Option For Accessories
OPT-EM-HB1EXT = EXTERNAL EMERGENCY BACK UP BATTERY

Factory-Installed Option:



OPT-EM-HB1EXT
EXTERNAL EMERGENCY
BACK UP BATTERY