CRLX SERIES COMMERCIAL INDOOR LIGHTING

WESTGATE
THE FUTURE IS HERE...AND IT'S QUITE BRIGHT!

CRLX6-50-80W-MP
X GEN. LED COMMERCIAL RECESSED LIGHT

MP Multi Power/Wattage (Selectable)

Customer Name:

Project Name:

Note: | Type:



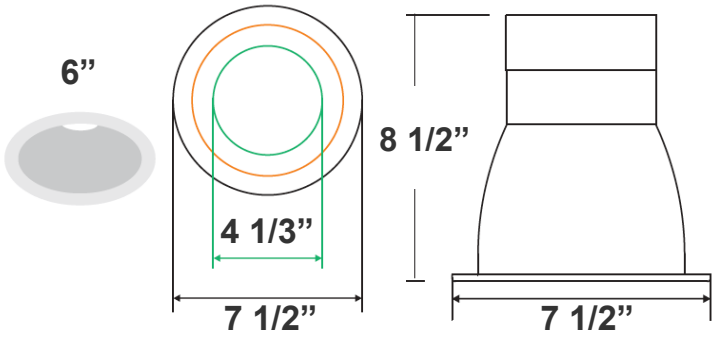

Ideal for hotel, offices, retail outlets, restaurant, parking garages, conference room, education facilities and more.

8 1/2”(H) X 7 1/2” (W)
Mounting Diameters: 6”- 6.7”

Features

- 6” Haze Finish TRIM
- Multi Power: The Switch Is On The Light Engine
- Mounting Options: Recessed
- 5-Year Warranty
- Lifespan: 50,000 hrs.

Technical Specifications

Electrical:

- Voltage: 120-277VAC 50/60Hz
- Wattage: 50W/65W/80W
- Power factor: >0.90
- Efficacy: 85 LPW

Mechanical:

- 6” Haze Finish TRIM
- Mounting Options: Recessed
- Temperature Rating: Designed to operate in temperatures 113°F
- No IC-Rated
- Suitable for Damp Locations
- 5-Year Warranty

Lighting:

- Multi Power: The Switch Is On The Light Engine
- Dimming: 1~10V Dimmable
- Total lumens: 6800LM Max.
- Color temperature: 3000K/3500K/4000K
- Color Rendering Index: >80
- Lifespan: 50,000 hrs.

Applications:

- Ideal for hotel, offices, retail outlets, restaurant, parking garages, conference room, education facilities and more.

Other Models:

- 40W | 3400LM | CRLX6-18-40W-MCTP

UL LISTED DIMMING 1-10V 5 YEAR

Phone: (877) 805-2252 | Fax: (877) 805-2252
www.westgatemfg.com

Other Views:



CRLX-EGN-50-80W-MP
Light Engine

+



CRLX-TRM-6
Trim

=



CRLX6-50-80W-MP
Complete Unit

Performance Table: CRLX6-50-80W-MP

MODEL NO.	Wattage	Voltage	Lumens	Color Temp.	BUG Rating	LPW
CRLX6-50-80W-MP	50W	120-277V	4250LM	3000K 3500K 4000K	B1-U1-G0	85
	65W		5525LM			
	80W		6800LM			

Sample Ordering

Model		Watt		Watt		Color Temp
CRLX6	-	50	-	80W	-	MP

Factory-Installed Option:

Blank = No Option For Accessories
OPT-EM-HB1EXT = EXTERNAL EMERGENCY BACK UP BATTERY

Factory-Installed Option:



OPT-EM-HB1EXT
EXTERNAL EMERGENCY
BACK UP BATTERY