WESTGATE
America's Most **Dependable** Lighting

CMCW SERIES

COMMERCIAL LIGHTING

CMCW8-SMD-35W-MCT-75D-D-BK

Customer Name:

Project Name:

Note: | Type:

IP65-rated specification-grade cylinder luminaire featuring high-efficiency SMD LEDs and a durable Tempered Glass Lens, delivering a controlled 75° beam angle for uniform, glare-reduced illumination in wet or outdoor environments.



BLACK

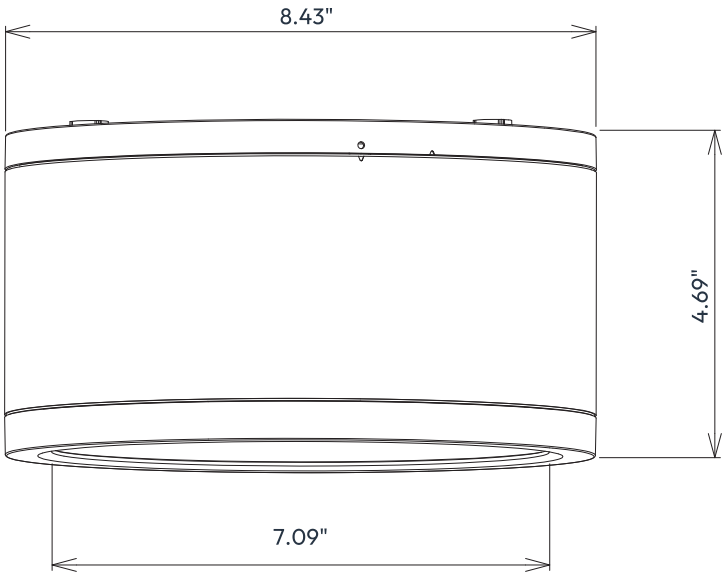

Technical Drawing: 8.43" (D) x 7.09" (W) x 4.69" (H)

FEATURES

- Multi CCT: Selectable Multi-CCT Switches on the back of the fixture
- Dimming: 0-10V Dimming
- Aluminum Housing & Tempered Glass Lens

SPECIFICATIONS

ELECTRICAL

- Voltage: 120-277VAC, 50/60Hz
- Power Factor: >0.90
- THD: <20%
- Wattage: 35W
- Efficacy: 104lm/W

MECHANICAL

- Aluminum Housing & Tempered Glass Lens
- Suspension Cable & Canopy Set Accessories Available
- Universal Swivel with Rod Kit Accessories Available
- Ambient Operating Temperature: -13°F to 113°F
- IP Rating: IP65 Suitable for wet locations
- 7-Year Warranty

LIGHTING

- Multi CCT: Selectable Multi-CCT Switches on the back of the fixture
- Dimming: 0-10V Dimming
- Total Lumens: 3650lm
- Color Temperatures: 3000K/3500K/4000K
- Color Rendering Index: CRI ≥ 80
- Beam Angle: 75°
- Rated life: 70,000 hours

APPLICATIONS

- Ideal for exterior façades, walkways, corridors, and general architectural lighting requiring wide, uniform illumination

OTHER MODELS

- 10W | 850lm | CMCW3-SMD-10W-MCT-75D-DT
- 25W | 2300lm | CMCW5-SMD-25W-MCT-75D-DT
- 30W | 2800lm | CMCW6-SMD-30W-MCT-75D-DT
- 40W | 4350lm | CMCW10-SMD-40W-MCT-75D-D

Phone/Fax: (877) 805-2252
www.westgatemfg.com

PERFORMANCE TABLE

MODEL NAMES	WATTAGE	VOLTAGE	LUMENS	COLOR TEMP.	LPW
CMCW8-SMD-35W-MCT-75D-D-BK	35W	120-277V	3650lm	3000K / 3500K / 4000K	104

PHOTOMETRICS CMCW8-SMD-35W-MCT-75D-D-BK

BUG rating

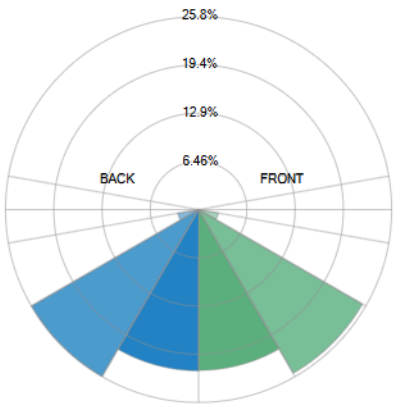

Rating: B2 U0 G0

Forward Light		
Low (0-30°)	751.1	21.6%
Medium (30-60°)	882.6	25.3%
High (60-80°)	93.59	2.69%
Very High (80-90°)	2.92	0.0838%
Back Light		
Low (0-30°)	752.9	21.6%
Medium (30-60°)	900.5	25.8%
High (60-80°)	98.58	2.83%
Very High (80-90°)	3.218	0.0923%
Uplight		
Low (90-100°)	0	0%
High (100-180°)	0	0%
Total		
Sum	3485	100%

IESNA TM-15-07 Luminaire Classification System For Outdoor Luminaires

BUG: B2-U0-G0

Iso-illuminance plot

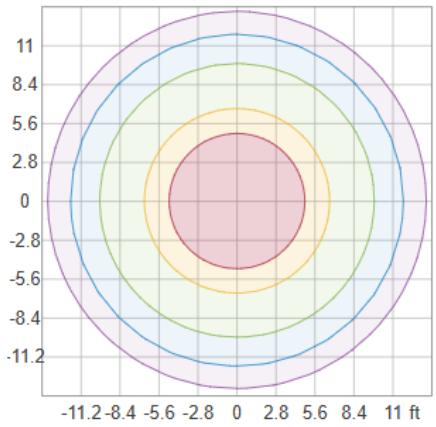

Peak illuminance: 25.8 fc
Mounting height: 9 ft
Number of c-planes: 4

OTHER VIEWS



SIDE VIEW



BACK VIEW

FACTORY-INSTALLED OPTIONS

OPTION	DESCRIPTION	IMAGE
OPT-EM-CMC46	Factory-installed Internal EM backup	

Phone/Fax: (877) 805-2252
www.westgatemfg.com