WESTGATE
America's Most Dependable Lighting

CMCW SERIES

COMMERCIAL LIGHTING

CMCW5-SMD-25W-MCT-75D-DT-BK
CMCW5-SMD-25W-MCT-75D-DT-WH

Customer Name:

Project Name:

Note: | Type:

IP65-rated specification-grade cylinder luminaire featuring high-efficiency SMD LEDs and a durable Tempered Glass Lens, delivering a controlled 75° beam angle for uniform, glare-reduced illumination in wet or outdoor environments.



BLACK



WHITE

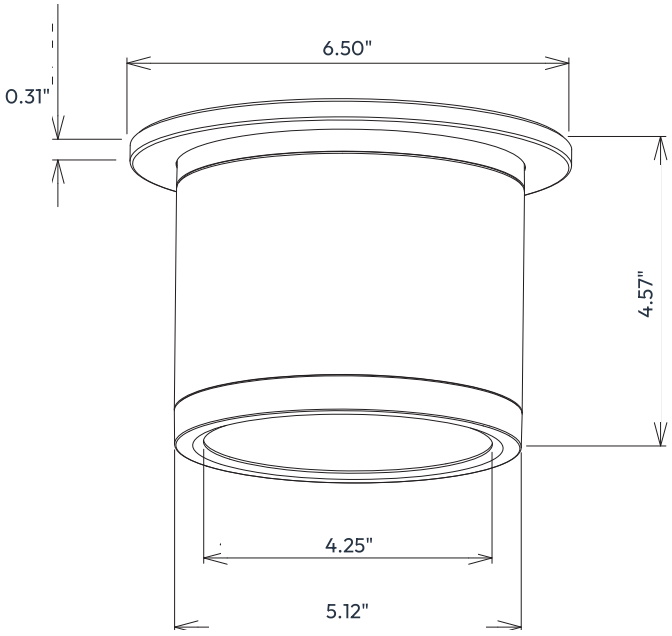

Technical Drawing: 6.50" (D) x 5.12" (W) x 4.57" (H)

FEATURES

- Multi CCT: Selectable Multi-CCT Switches on the back of the fixture
- Triac Dimmable at 120V
- Aluminum Housing & Tempered Glass Lens

SPECIFICATIONS

ELECTRICAL

- Voltage: 120VAC, 50/60Hz
- Power Factor: >0.90
- THD: <20%
- Wattage: 25W
- Efficacy: 92lm/W

MECHANICAL

- Aluminum Housing & Tempered Glass Lens
- Suspension Cable & Canopy Set Accessories Available
- Universal Swivel with Rod Kit Accessories Available
- Ambient Operating Temperature: -13°F to 113°F
- IP Rating: IP65 Suitable for wet locations
- 7-Year Warranty

LIGHTING

- Multi CCT: Selectable Multi-CCT Switches on the back of the fixture
- Dimming: Triac Dimmable at 120V
- Total Lumens: 2300lm
- Color Temperatures: 3000K/3500K/4000K
- Color Rendering Index: CRI ≥ 80
- Beam Angle: 75°
- Rated life: 70,000 hours

APPLICATIONS

- Ideal for exterior façades, walkways, corridors, and general architectural lighting requiring wide, uniform illumination

OTHER MODELS

- 10W | 850lm | CMCW3-SMD-10W-MCT-75D-DT
- 30W | 2800lm | CMCW6-SMD-30W-MCT-75D-DT
- 35W | 3650lm | CMCW8-SMD-35W-MCT-75D-D
- 40W | 4350lm | CMCW10-SMD-40W-MCT-75D-D

Phone/Fax: (877) 805-2252
www.westgatemfg.com

PERFORMANCE TABLE

MODEL NAMES	WATTAGE	VOLTAGE	LUMENS	COLOR TEMP.	LPW
CMCW5-SMD-25W-MCT-75D-DT-BK CMCW5-SMD-25W-MCT-75D-DT-WH	25W	120V	2300lm	3000K / 3500K / 4000K	92

PHOTOMETRICS CMCW5-SMD-25W-MCT-75D-DT

BUG rating

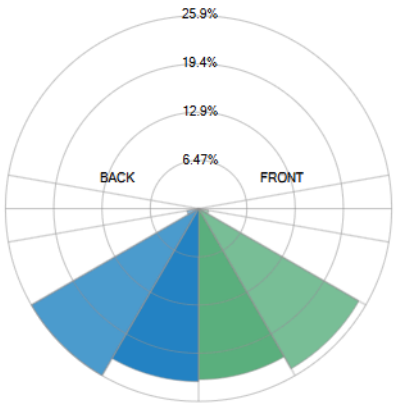

Rating: B2 U0 G0

Forward Light		
Low (0-30°)	495.4	22.9%
Medium (30-60°)	535.4	24.8%
High (60-80°)	29.88	1.38%
Very High (80-90°)	2.32	0.107%
Back Light		
Low (0-30°)	501	23.2%
Medium (30-60°)	558.6	25.9%
High (60-80°)	34.35	1.59%
Very High (80-90°)	2.688	0.124%
Uplight		
Low (90-100°)	0	0%
High (100-180°)	0	0%
Total		
Sum	2160	100%

IESNA TM-15-07 Luminaire Classification System For Outdoor Luminaires

Iso-illuminance plot

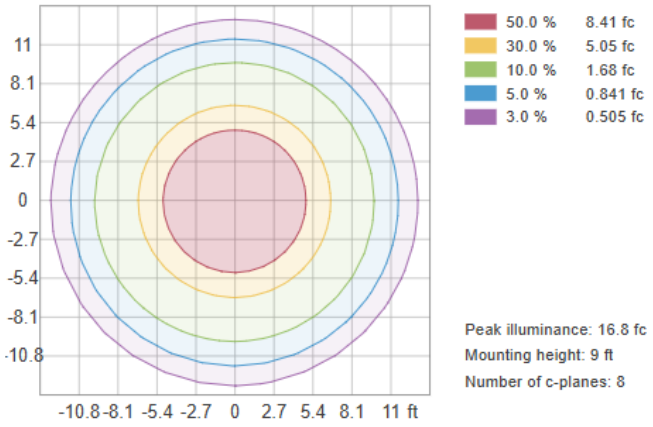

BUG: B2-U0-G0

OTHER VIEWS



LENS VIEW



BACK VIEW

FACTORY-INSTALLED OPTIONS

OPTION	DESCRIPTION	IMAGE
OPT-EM-CMC46	Factory-installed Internal EM backup	

Phone/Fax: (877) 805-2252
www.westgatemfg.com