WESTGATE
America's Most Dependable Lighting

CMCW SERIES

COMMERCIAL LIGHTING

CMCW5-COB-25W-MCT-36D-DT-BK
CMCW5-COB-25W-MCT-36D-DT-WH

Customer Name:

Project Name:

Note: | Type:

IP65 Spec COB Cylinder featuring a high-efficiency COB source and tempered glass lens, providing a controlled 36° beam angle for crisp, uniform illumination in architectural environments.



BLACK



WHITE

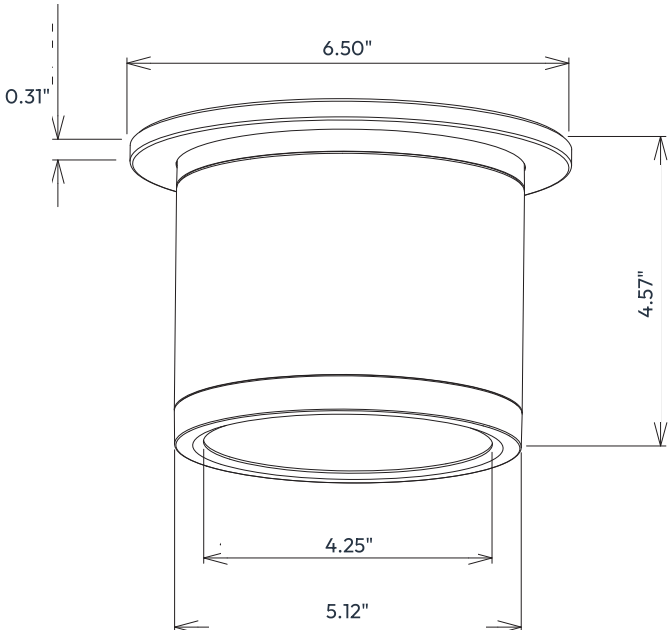

Technical Drawing: 6.50" (D) x 5.12" (W) x 4.57" (H)

FEATURES

- Multi CCT: Selectable Multi-CCT Switches on the back of the fixture
- Triac Dimmable at 120V
- Aluminum Housing & Tempered Glass Lens

SPECIFICATIONS

ELECTRICAL

- Voltage: 120VAC, 50/60Hz
- Power Factor: >0.90
- THD: <20%
- Wattage: 25W
- Efficacy: 90lm/W

MECHANICAL

- Aluminum Housing & Tempered Glass Lens
- Suspension Cable & Canopy Set Accessories Available
- Universal Swivel with Rod Kit Accessories Available
- Ambient Operating Temperature: -13°F to 113°F
- IP Rating: IP65 Suitable for wet locations
- 7-Year Warranty

LIGHTING

- Multi CCT: Selectable Multi-CCT Switches on the back of the fixture
- Dimming: Triac Dimmable at 120V
- Total Lumens: 2250lm
- Color Temperatures: 3000K/3500K/4000K
- Color Rendering Index: CRI ≥ 80
- Beam Angle: 36°
- Rated life: 70,000 hours

APPLICATIONS

- Ideal for exterior façades, walkways, corridors, and general architectural lighting focused, uniform illumination

OTHER MODELS

- 10W | 900lm | CMCW3-COB-10W-MCT-36D-DT
- 30W | 2500lm | CMCW6-COB-30W-MCT-36D-DT
- 35W | 3100lm | CMCW8-COB-35W-MCT-36D-D
- 40W | 3850lm | CMCW10-COB-40W-MCT-36D-D

Phone/Fax: (877) 805-2252
www.westgatemfg.com

PERFORMANCE TABLE

MODEL NAMES	WATTAGE	VOLTAGE	LUMENS	COLOR TEMP.	LPW
CMCW5-COB-25W-MCT-36D-DT-BK CMCW5-COB-25W-MCT-36D-DT-WH	25W	120V	2250lm	3000K / 3500K / 4000K	90

PHOTOMETRICS CMCW5-COB-25W-MCT-36D-DT

BUG rating

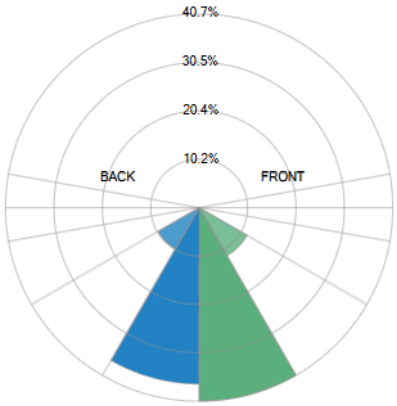

Rating: B2 U0 G0

Forward Light		
Low (0-30°)	877.1	40.7%
Medium (30-60°)	251.2	11.7%
High (60-80°)	5.303	0.246%
Very High (80-90°)	0.5563	0.0258%
Back Light		
Low (0-30°)	799.1	37.1%
Medium (30-60°)	215.8	10.0%
High (60-80°)	3.994	0.185%
Very High (80-90°)	0.4449	0.0207%
Uplight		
Low (90-100°)	0	0%
High (100-180°)	0	0%
Total		
Sum	2153	100%

IESNA TM-15-07 Luminaire Classification System For Outdoor Luminaires

BUG: B2-U0-G0

Iso-illuminance plot

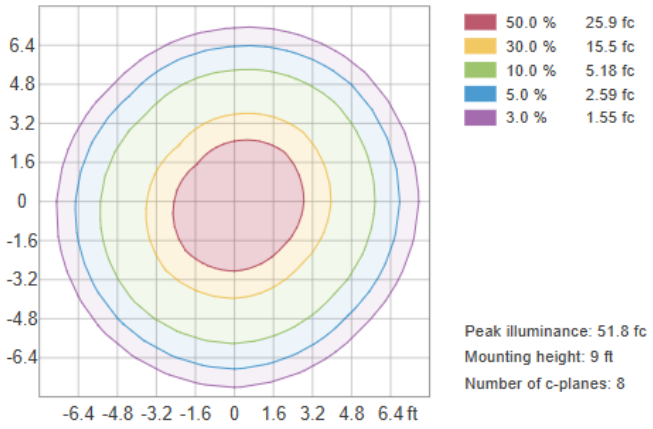

Peak illuminance: 51.8 fc
Mounting height: 9 ft
Number of c-planes: 8

OTHER VIEWS



LENS VIEW



BACK VIEW

FACTORY-INSTALLED OPTIONS

OPTION	DESCRIPTION	IMAGE
OPT-EM-CMC46	Factory-installed Internal EM backup	

Phone/Fax: (877) 805-2252
www.westgatemfg.com