WESTGATE
America's Most **Dependable** Lighting

CMCW SERIES

COMMERCIAL LIGHTING

CMCW10-SMD-40W-MCT-75D-D-WH

Customer Name:

Project Name:

Note: | Type:

IP65-rated specification-grade cylinder luminaire featuring high-efficiency SMD LEDs and a durable Tempered Glass Lens, delivering a controlled 75° beam angle for uniform, glare-reduced illumination in wet or outdoor environments.



WHITE

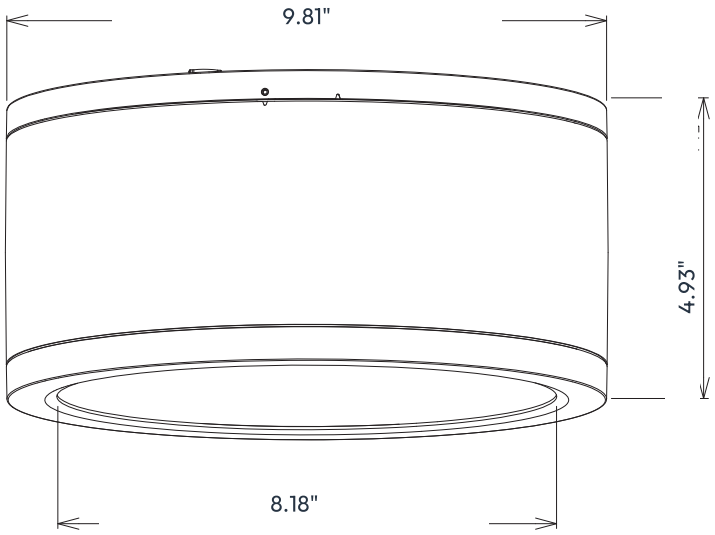

Technical Drawing: 9.81" (D) x 8.18" (W) x 4.93" (H)

FEATURES

- Multi CCT: Selectable Multi-CCT Switches on the back of the fixture
- Dimming: 0-10V Dimming
- Aluminum Housing & Tempered Glass Lens

SPECIFICATIONS

ELECTRICAL

- Voltage: 120-277VAC, 50/60Hz
- Power Factor: >0.90
- THD: <20%
- Wattage: 40W
- Efficacy: 108lm/W

MECHANICAL

- Aluminum Housing & Tempered Glass Lens
- Suspension Cable & Canopy Set Accessories Available
- Universal Swivel with Rod Kit Accessories Available
- Ambient Operating Temperature: -13°F to 113°F
- IP Rating: IP65 Suitable for wet locations
- 7-Year Warranty

LIGHTING

- Multi CCT: Selectable Multi-CCT Switches on the back of the fixture
- Dimming: 0-10V Dimming
- Total Lumens: 4350lm
- Color Temperatures: 3000K/3500K/4000K
- Color Rendering Index: CRI ≥ 80
- Beam Angle: 75°
- Rated life: 70,000 hours

APPLICATIONS

- Ideal for exterior façades, walkways, corridors, and general architectural lighting requiring wide, uniform illumination

OTHER MODELS

- 10W | 850lm | CMCW3-SMD-10W-MCT-75D-DT
- 25W | 2300lm | CMCW5-SMD-25W-MCT-75D-DT
- 30W | 2800lm | CMCW6-SMD-30W-MCT-75D-DT
- 35W | 3650lm | CMCW8-SMD-35W-MCT-75D-D

Phone/Fax: (877) 805-2252
www.westgatemfg.com

PERFORMANCE TABLE

MODEL NAMES	WATTAGE	VOLTAGE	LUMENS	COLOR TEMP.	LPW
CMCW10-SMD-40W-MCT-75D-D-WH	40W	120-277V	4350lm	3000K / 3500K / 4000K	108

PHOTOMETRICS CMCW10-SMD-40W-MCT-75D-D-WH

BUG rating

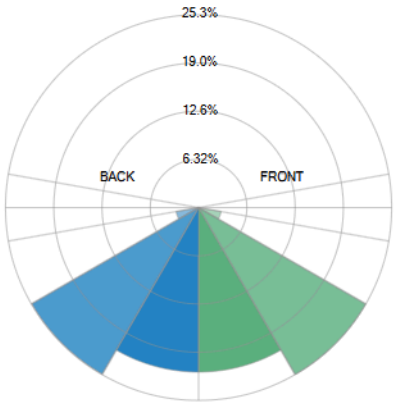

Rating: B2 U0 G1

Forward Light		
Low (0-30°)	915.5	21.6%
Medium (30-60°)	1073	25.3%
High (60-80°)	126.9	2.99%
Very High (80-90°)	6.687	0.158%
Back Light		
Low (0-30°)	915.6	21.6%
Medium (30-60°)	1071	25.2%
High (60-80°)	126.7	2.99%
Very High (80-90°)	6.819	0.161%
Uplight		
Low (90-100°)	0	0%
High (100-180°)	0	0%
Total		
Sum	4242	100%

IESNA TM-15-07 Luminaire Classification System For Outdoor Luminaires

Iso-illuminance plot

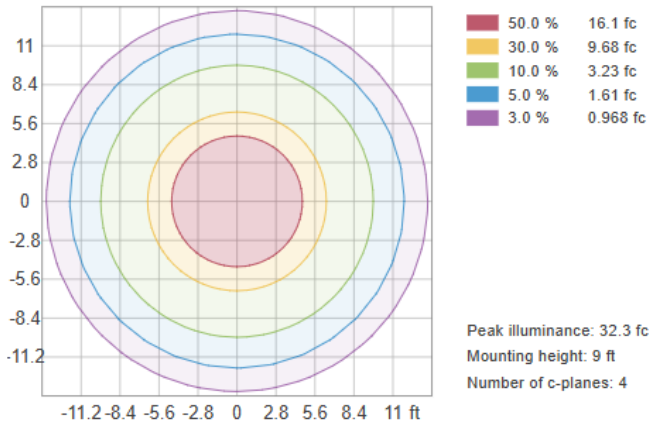

BUG: B2-U0-G1

OTHER VIEWS



SIDE VIEW



BACK VIEW

FACTORY-INSTALLED OPTIONS

OPTION	DESCRIPTION	IMAGE
OPT-EM-CMC46	Factory-installed Internal EM backup	

Phone/Fax: (877) 805-2252
www.westgatemfg.com