CMCW SERIES

COMMERCIAL LIGHTING

CMCW10-COB-40W-MCT-36D-D-WH

Customer Name:

Project Name:

Note: | Type:

IP65 Spec COB Cylinder featuring a high-efficiency COB source and tempered glass lens, providing a controlled 36° beam angle for crisp, uniform illumination in architectural environments.



WHITE

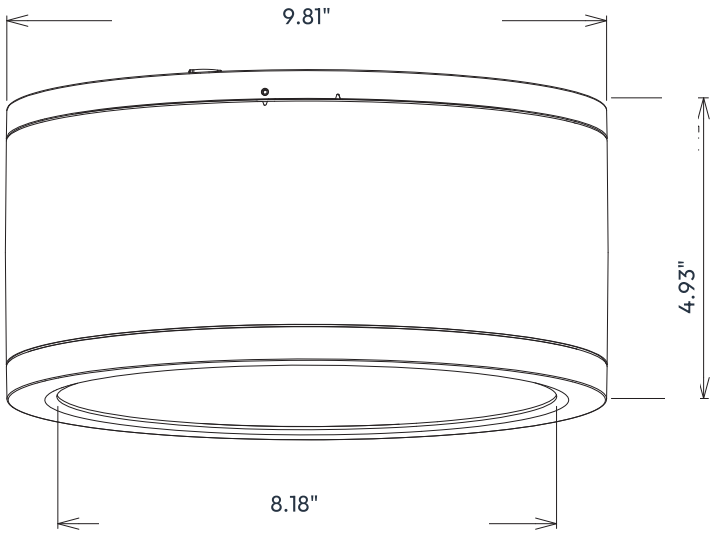

Technical Drawing: 9.81" (D) x 8.18" (W) x 4.93" (H)

FEATURES

- Multi CCT: Selectable Multi-CCT Switches on the back of the fixture
- Dimming: 0-10V Dimming
- Aluminum Housing & Tempered Glass Lens

SPECIFICATIONS

ELECTRICAL

- Voltage: 120-277VAC, 50/60Hz
- Power Factor: >0.90
- THD: <20%
- Wattage: 40W
- Efficacy: 96lm/W

MECHANICAL

- Aluminum Housing & Tempered Glass Lens
- Suspension Cable & Canopy Set Accessories Available
- Universal Swivel with Rod Kit Accessories Available
- Ambient Operating Temperature: -13°F to 113°F
- IP Rating: IP65 Suitable for wet locations
- 7-Year Warranty

LIGHTING

- Multi CCT: Selectable Multi-CCT Switches on the back of the fixture
- Dimming: 0-10V Dimming
- Total Lumens: 3850lm
- Color Temperatures: 3000K/3500K/4000K
- Color Rendering Index: CRI ≥ 80
- Beam Angle: 36°
- Rated life: 70,000 hours

APPLICATIONS

- Ideal for exterior façades, walkways, corridors, and general architectural lighting focused, uniform illumination

OTHER MODELS

- 10W | 900lm | CMCW3-COB-10W-MCT-36D-DT
- 25W | 2250lm | CMCW5-COB-25W-MCT-36D-DT
- 30W | 2500lm | CMCW6-COB-30W-MCT-36D-DT
- 35W | 3100lm | CMCW8-COB-35W-MCT-36D-D

Phone/Fax: (877) 805-2252
www.westgatemfg.com

PERFORMANCE TABLE

MODEL NAMES	WATTAGE	VOLTAGE	LUMENS	COLOR TEMP.	LPW
CMCW10-COB-40W-MCT-36D-D-WH	40W	120-277V	3850lm	3000K / 3500K / 4000K	96

PHOTOMETRICS CMCW10-COB-40W-MCT-36D-D-WH

BUG rating

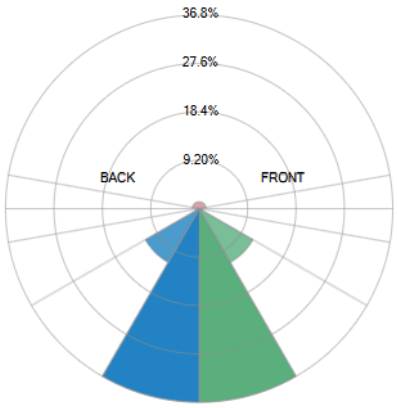

Rating: B3 U2 G0

Forward Light		
Low (0-30°)	1231	36.8%
Medium (30-60°)	395.4	11.8%
High (60-80°)	23.14	0.692%
Very High (80-90°)	1.116	0.0334%
Back Light		
Low (0-30°)	1231	36.8%
Medium (30-60°)	395.4	11.8%
High (60-80°)	23.14	0.692%
Very High (80-90°)	1.116	0.0334%
Uplight		
Low (90-100°)	0.5209	0.0156%
High (100-180°)	44.44	1.33%
Total		
Sum	3346	100%

IESNA TM-15-07 Luminaire Classification System For Outdoor Luminaires

BUG: B3-U2-G0

Iso-illuminance plot

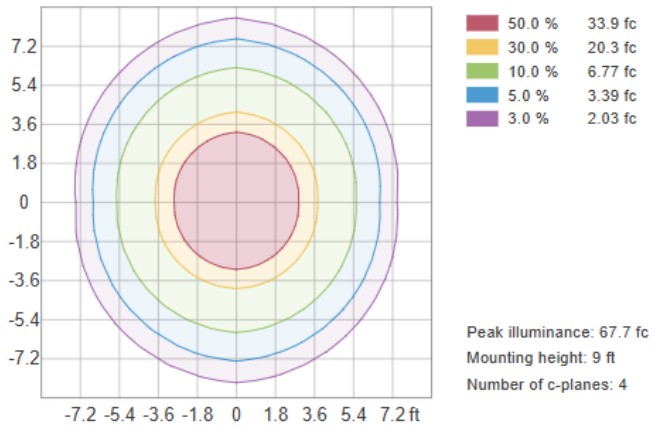

Peak illuminance: 67.7 fc
Mounting height: 9 ft
Number of c-planes: 4

OTHER VIEWS



SIDE VIEW

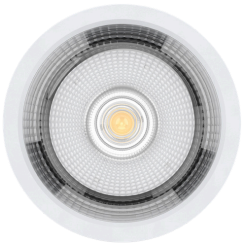

LENS VIEW



BACK VIEW

FACTORY-INSTALLED OPTIONS

OPTION	DESCRIPTION	IMAGE
OPT-CMCW10-COB-24D	24° OPTIC CMCW10	
OPT-CMCW10-COB-60D	60° OPTIC CMCW10	
OPT-EM-CMC46	Factory-installed Internal EM backup	

Phone/Fax: (877) 805-2252
www.westgatemfg.com