CL-HL SERIES

Industrial Lighting

CL-HL-240W-50K-E39

WESTGATE
THE FUTURE IS HERE...AND IT'S QUITE BRIGHT!



Customer Name:

Project Name:

Note: | Type:

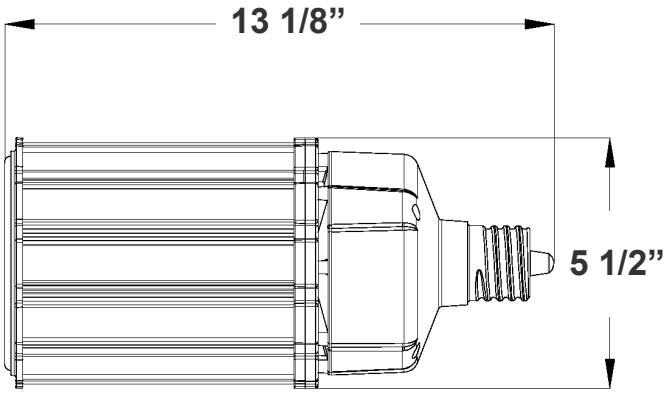

LED Corn Lamp suitable for supermarkets, warehouses, garages, home, offices, hotels, hospitals, schools, high bay retrofitting

13 1/8”(H) x 5 1/2”(W)

Features

- Lamp base: E39 Mogul Base
- 5-Year Warranty
- Housing: PC + Aluminum
- 50,000 Hours Rated Life

Technical Specifications

Electrical:

- Voltage: 120-277V AC 50/60Hz
- Wattage: 240W
- Power Factor: >0.9
- AC Direct / Bypass Existing Ballast
- THD: ≤20%
- Efficacy: 145 LPW

Lighting:

- LED SMD type: Edison 2835
- Total Lumens: 34800LM
- Color Temperatures: 5000K
- Color Rendering Index: CRI ≥ 80
- Beam Angle: 360°
- Replacement Range: 800W HID

Mechanical:

- Lamp base: E39 Mogul Base
- PC and Aluminum housing and Sealant pouring for
- Lamp plastic housing and Sealant pouring for whole driver
- Do not use the lamps in enclosed fixtures
- Operating temperature: -40°F to 176°F
- Suitable for damp location

Applications:

- LED Corn Lamp suitable for supermarkets, warehouses, garages, home, offices, hotels, hospitals, schools, highbay retrofitting

Other Models:

- 200W | 28000LM | CL-HL-200W-50K-E39
- 300W | 43500LM | CL-HL-300W-50K-E39

Phone: (877) 805-2252 | Fax: (877) 805-2252
www.westgatemfg.com

WG-Z6-Z9-2Z

Photometrics: CL-HL-240W-50K-E39

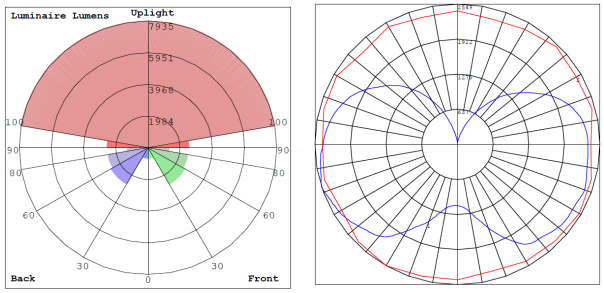

BUD Rating: B3-U5-G5

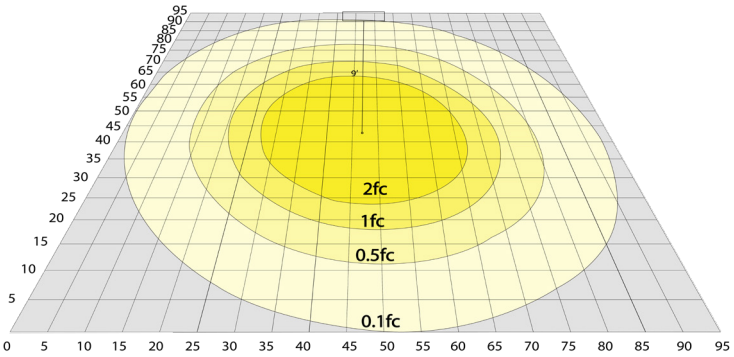

240W, 5000K Area 95'x 95' Mounting Height: 9'

Performance Table: CL-HL-200W-50K-E39

MODEL NO.	Wattage	Voltage	Lumens	Color Temp.	BUG Rating	LPW
CL-HL-240W-50K-E39	240W	120~277V	34800LM	5000K	B3-U5-G5	145

Sample Ordering

Model	Size	Wattage	Color Temp.	Base
CL	EHL	240W		E39

50K = 5000K

Accessory:

Blank = No Option For Accessories

Example:

1. CL-EHL-240W-50K-E39 (FOR CL EHL 240W 50K FIXTURE 120-277V)